California's SFSF Phase II Application CFDA Number: 84.394

Section II - Indicator (b)(1)

II. Assurance (b): Improving Collection and Use of Data

A State must collect and publicly report information on the elements of its statewide longitudinal data system, on whether teachers receive data on student growth in a manner that is timely and informs instructional programs, and on whether the State provides teachers with reports of individual teacher impact on student achievement.

Indicator (b)(1)	Indicate which of the 12 elements described in section 6401(e)(2)(D) of the America COMPETES Act are included in the State's statewide longitudinal data system.

Instructions: Please indicate which of the 12 elements of the America COMPETES Act are included in the State's statewide longitudinal data system.

Please respond (check Yes or No): For pre-K through postsecondary education, does the State's statewide longitudinal data system include the following elements:

(1) A unique statewide student identifier that does not permit a student to be individually identified by users of the system?

☐ Yes.
☒ No. Provide a plan for including this element in your statewide longitudinal data system in Part 3B. Cite #1 in the Plan Element Verification Chart in Part 3B, Section II.

(2) Student-level enrollment, demographic, and program participation information?

☐ Yes.
☒ No. Provide a plan for including this element in your statewide longitudinal data system in Part 3B. Cite #2 in the Plan Element Verification Chart in Part 3B, Section II.

(3) Student-level information about the points at which students exit, transfer in, transfer out, drop out, or complete pre-K through postsecondary education programs?

☐ Yes.
☒ No. Provide a plan for including this element in your statewide longitudinal data system in Part 3B. Cite #3 in the Plan Element Verification Chart in Part 3B, Section II.

4) The capacity to communicate with higher education data systems?

☐ Yes.
☒ No. Provide a plan for including this element in your statewide longitudinal data system in Part 3B. Cite #4 in the Plan Element Verification Chart in Part 3B, Section II.

Indicator (b)(1) **Indicate which of the 12 elements described in section 6401(e)(2)(D) of the America COMPETES Act are included in the State's statewide longitudinal data system.**

Race to the Top

Please respond (check Yes or No): For pre-K through grade 12 education, does the State's statewide longitudinal data system include the following elements:

(5) An audit system assessing data quality, validity, and reliability?

☐ Yes.
☒ No. Provide a plan for including this element in your statewide longitudinal data system in Part 3B. Cite #5 in the Plan Element Verification Chart in Part 3B, Section II.

(6) Yearly State assessment records of individual students?

☒ Yes.
☐ No. Provide a plan for including this element in your statewide longitudinal data system in Part 3B. Cite #6 in the Plan Element Verification Chart in Part 3B, Section II.

(7) Information on students not tested, by grade and subject?

☒ Yes.
☐ No. Provide a plan for including this element in your statewide longitudinal data system in Part 3B. Cite #7 in the Plan Element Verification Chart in Part 3B, Section II.

(8) A teacher identifier system with the ability to match teachers to students?

☐ Yes.
☒ No. Provide a plan for including this element in your statewide longitudinal data system in Part 3B. Cite #8 in the Plan Element Verification Chart in Part 3B, Section II.

(9) Student-level transcript information, including on courses completed and grades earned?

☐ Yes.
☒ No. Provide a plan for including this element in your statewide longitudinal data system in Part 3B. Cite #9 in the Plan Element Verification Chart in Part 3B, Section II.

(10) Student-level college readiness test scores?

☐ Yes.
☒ No. Provide a plan for including this element in your statewide longitudinal data system in Part 3B. Cite #10 in the Plan Element Verification

Indicator (b)(1) **Indicate which of the 12 elements described in section 6401(e)(2)(D) of the America COMPETES Act are included in the State's statewide longitudinal data system.**

Race to the Top

Chart in Part 3B, Section II.

Please respond (check Yes or No): For postsecondary education, does the State's statewide longitudinal data system include the following elements:

(11) Information regarding the extent to which students transition successfully from secondary school to postsecondary education, including whether students enroll in remedial coursework?

☐ Yes.
☒ No. Provide a plan for including this element in your statewide longitudinal data system in Part 3B. Cite #11 in the Plan Element Verification Chart in Part 3B, Section II.

(12) Other information determined necessary to address alignment and adequate preparation for success in postsecondary education?

☐ Yes.
☒ No. Provide a plan for including this element in your statewide longitudinal data system in Part 3B. Cite #12 in the Plan Element Verification Chart in Part 3B, Section II.

California's SFSF Phase II Application CFDA Number: 84.394

Section II - Indicator (b)(1)

Part 3B: SFSF Data Collection and Public Reporting Plan	
Process and timeline for developing and implementing indicators by September 30, 2011	
Indicator: (b)(1) Indicate which of the 12 elements described in section 6401(e)(2)(D) of the American COMPLETES Act are included in the State's statewide longitudinal data system.	
Contact Person/Division: Keric Ashley Data Management Division (DMD)	**Expected date of implementation:** September 2011
Plan (D)	
Brief Description of Plan: California will continue to develop its current systems and develop a longitudinal P-20 system. The plan is to coordinate work across seven education systems within four focus areas (as described below).	

Indicator: (b)(1) Development		
Milestone	**Date**	**Potential Obstacles**
Focus Area 1: Implement a process for LEAs to issue and maintain pre-K data using the statewide student identifier.	September 2011	Cost/funding.
Focus Area 1: Identify additional "core data elements" for K-12.	September 2011	
Focus Area 1: Implement system to provide robust pre K-12 longitudinal reports.	April 2011	
Focus Area 1: California State University to update current data architecture to allow for better linkages to K-12 and higher education.	January 2011	
Focus Area 2: Establish Joint Powers Authority representing the California Department of Education, California Community Colleges, California State University, University of California, and Employment Development	February 2010	

California's SFSF Phase II Application CFDA Number: 84.394

Section II - Indicator (b)(1)

Indicator: (b)(1)	Development	
Department.		
Focus Area 2: Data conversion process for P-20 system in place.	August 2011	
Focus Area 2: P-20 data warehouse infrastructure in place.	October 2010	
Focus Area 2: P-20 data warehouse in place and linking P-20 data.	September 2011	
Focus Area 3: Complete and implement CCEDS data access and use policies.	December 2010	
Focus Area 3: Complete a comprehensive strategic plan for PK-20 research.	December 2010	
Focus Area 4: eTranscript California expanded to service all districts in California.	September 2011	
Focus Area 4: Statewide Transcript Evaluation Services scaled and available to all California high schools.	September 2011	

Implementation				
		Agency/Division	**Estimated Cost (C)**	**Funding Source (Federal, State, or Local)**
Development (A)		The Office of the Secretary of Education, California Commission on Teacher Credentialing, California Community Colleges, California State University, University of California, California Postsecondary Education Commission, California Partnership for Achieving Student Success, and the California Department of Education.	$20 million	California submitted an application for IES grant funds. California plans to submit an application for Race to the Top.
Execution (A)				
Oversight (A)				
Technical Assistance (B)				

California's SFSF Phase II Application CFDA Number: 84.394

Section II - Indicator (b)(1)

PART 3B: DATA COLLECTION AND REPORTING PLAN

II. Indicator (b)(1)

Indicator (b)(1) Indicate which of the twelve elements of the America COMPETES Act (ACA) are included in the State's statewide longitudinal data system.

The ACA authorizes an increase in federal science and engineering research funding and support for kindergarten through postdoctoral education. With respect to the **twelve elements prescribed by the ACA**, California has completed or has made progress as summarized below.

Plan Element Verification

ACA Element No.	America Completes Act (ACA) Elements	Must be addressed in plan	Does not need to be addressed in plan	California's Status Progress/ Complete	IES SLDS Grant Funds Requested to (D)evelop or (E)nhance
1	A unique statewide student identifier that does not permit a student to be individually identified by users of the system.	Y		**PROGRESS** This element is in place for K-12 and pre-K connected with local educational agencies (LEAs), but not for pre-K providers not affiliated with an LEA, and not for postsecondary.	E
2	Student-level enrollment, demographic, and program participation information.		Y	**PROGRESS** This element is in place for K-12, but not for pre-K .	E
3	Student-level information about the points at which students exit, transfer in, transfer out, drop out, or complete P-16 education programs.	Y		**PROGRESS** We have exit status for K-12 and postsecondary, however linkages between the systems need to be established.	E
4	The capacity to communicate with higher education data systems.	Y		**PROGRESS** Plans are to develop a match process for K-12 to postsecondary. Some postsecondary institutions are collecting the statewide student identifier (SSID) information, thereby increasing the validity of a match process between K-12 and postsecondary records.	D

California's SFSF Phase II Application CFDA Number: 84.394

Section II - Indicator (b)(1)

ACA Element No.	America Completes Act (ACA) Elements	Must be addressed in plan	Does not need to be addressed in plan	California's Status Progress/ Complete	IES SLDS Grant Funds Requested to (D)evelop or (E)nhance
5	A State data audit system assessing data quality, validity, and reliability.	Y		**PROGRESS** California Longitudinal Pupil Achievement Data System (CALPADS) currently has numerous data edit checks. Need to enhance the state's monitoring process to include verification of select data submitted via the CALPADS.	E
6	Yearly test records of individual students with respect to assessments under section 1111(b) of the Elementary and Secondary Education Act of 1965 (20 U.S.C. 6311(b))		Y	**COMPLETE** Test data will be loaded into the CALPADS system this coming spring.	N/A
7	Information on students not tested by grade and subject.		Y	**COMPLETE** The state has data on students not tested by grade and subject. This data will be loaded into the CALPADS system this coming spring.	N/A
8	A teacher identifier system with the ability to match teachers to students.		Y	**PROGRESS** This element is in place for K-12 and will be implemented in 2010-11.	N/A
9	Student-level transcript information, including information on courses completed and grades earned.	Y		**PROGRESS** CALPADS is designed collect these data and will be implemented in 2010-11.	E
10	Student-level college readiness test scores.	Y		**PROGRESS** State currently collects SAT/ACT as part of application for CSU and UC. State assessment scores will be in CALPADS. Plan is to use current grant funds to expand CALPADS functionality to include the collection of EAP, and AP test scores.	E

California's SFSF Phase II Application CFDA Number: 84.394

Section II - Indicator (b)(1)

ACA Element No.	America Completes Act (ACA) Elements	Must be addressed in plan	Does not need to be addressed in plan	California's Status Progress/ Complete	IES SLDS Grant Funds Requested to (D)evelop or (E)nhance
11	Information regarding the extent to which students transition successfully from secondary school to postsecondary education, including whether students enroll in remedial coursework.	Y		**PROGRESS** California now has statewide student-level data in K-12 and postsecondary. Plans are to develop a match process that will identify which students transition from California K-12 to California postsecondary education including students enrolling in remedial coursework while in postsecondary.	E
12	Other information determined necessary to address alignment and adequate preparation for success in postsecondary education.	Y		**PROGRESS** Plan to expand CALPADS collection to include other "core data elements" such as attendance; to generate new reports based on the education and workforce research agenda; to ensure that the P-20 data collected are relevant given the latest research findings; to ensure district and school staff are trained to use the data; and to complete the alignment of course data. A P-20 data warehouse will link K-12 to higher education data to evaluate test scores and course taking patterns.	E

Note: The excerpt of Appendix C, from our IES SLDS Grant Proposal, which appears at the end of the section Part 3B II, provides additional information regarding California's progress towards establishing the ACA elements.

California's Plan for Establishing the Twelve ACA Elements

Recent mandates through the chaptering of the Education Data and Information Act, Chapter 561, Statutes of 2008, [SB 1298, (Simitian)] and later Chapter 159, Statutes of 2009, [SB 19, (Simitian)] legislatively position the state of California to pursue the California Comprehensive Education Data System (CCEDS). The CCEDS will serve as the longitudinal P-20 education data warehouse capable of linking teacher and student information and connecting to non-education data (e.g., workforce).

The California Department of Education (CDE), in collaboration with California Community Colleges (CCC), California State University (CSU), and University of California (UC) will build and maintain the CCEDS under a collective governance structure called the Joint Powers Authority (JPA). In addition to these four public education segments, the following groups will participate in the current project: the Commission on Teacher Credentialing (CTC), the California County Superintendents Educational Services Association (CCSESA), the California Postsecondary Education Commission (CPEC), the California Partnership for Achieving Student Success (Cal-PASS), the Fiscal Crisis and Management Assistance Team (FCMAT)/California School Information Services (CSIS), and the Employment Development Department (EDD).

California's SFSF Phase II Application CFDA Number: 84.394

Section II - Indicator (b)(1)

Current Status of California's Statewide Longitudinal Data System

The CDE received a 2006 Institute of Education Sciences (IES) Statewide Longitudinal Data Systems (SLDS) grant to support the development of the California Longitudinal Pupil Achievement Data System (CALPADS). This fall, the CALPADS began enrolling local educational agency (LEA) administrators and is now gathering information on student enrollment and the status of those students who have exited a school (which the state uses to determine the number and rate of graduates and dropouts) for over six million K-12 students. The system employs a unique statewide student identifier (SSID) to link the student data longitudinally. Throughout this year, additional data collection windows will be implemented to gather data on student program eligibility and participation, student primary language, teaching assignments (at the classroom level), student course enrollments, student discipline, student course completion, and student health. The CDE will calculate the four-year National Governors Association (NGA) graduation rate starting with the graduating class of 2010. The state defined the requirements for course data that enables the matching of teachers to students by placing the teacher identifier on the course section record and placing the course section identifier on the student course enrollment record.

California has been publicly posting data reports on a CDE web site known as DataQuest (http://dq.cde.ca.gov/dataquest/). While CALPADS will supply longitudinal reports for LEAs with student-level data, DataQuest will be expanded to include aggregate reports generated with CALPADS data. Most reports will be available by school, district, county, and state levels and many will also be posted as downloadable files. Student-level data will only be made available through a Family Educational Rights and Privacy Act compliant data access process.

In 2009, the CDE and CTC received an IES SLDS grant to develop the California Longitudinal Teacher Integrated Data Education System (CALTIDES). The CALTIDES will integrate teacher assignment information collected by the CALPADS with teacher authorization and teacher preparation data (for over one million teachers) stored in the data systems at the CTC organization. The systems integration vendor will be selected in March 2010 and the CDE and CTC are expected to launch the CALTIDES in 2011-12.

California (8 of 10 Essential Elements)

Although each state's education system is unique, 10 Elements are essential in a longitudinal data system. DQC's annual survey results track individual states' progress towards implementing these Elements but also the policy implications of creating such longitudinal systems. The DQC provides a forum for states to learn from each other as they continue to improve their systems, so DQC also catalogues state-specific resources to facilitate cross-state sharing of benefits, challenges, and lessons learned.

Data Systems Overview | 10 Elements | Policy Implications | State Resources | Using Data Systems

Summary of Growth

NUMBER OF ELEMENTS MET

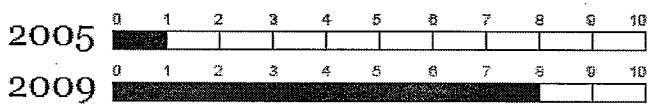

Elements met in this state

What does this mean? Read about the 10 Essential Elements

- ✓ 1. Statewide Student Identifier
- ✓ 2. Student-Level Enrollment Data
- ✓ 3. Student-Level Test Data
- ✓ 4. Information on Untested Students
- ✓ 5. Statewide Teacher Identifier with a Teacher-Student Match
- ✗ 6. Student-Level Course Completion (Transcript) Data
- ✓ 7. Student-Level SAT, ACT, and Advanced Placement Exam Data
- ✓ 8. Student-Level Graduation and Dropout Data
- ✗ 9. Ability to Match Student-Level P-12 and Higher Education Data
- ✓ 10. A State Data Audit System

Figure 1. California Growth on the Data Quality Campaign (DQC) 10 Elements
Source: The Data Quality Campaign 2009 Survey Results

Although the CDE is making great progress on the Data Quality Campaign (DQC) Ten Essential Elements for P-20 data collection, the majority of information on students and teachers that transition through California's public education system and workforce data is collected and stored in separate state-level source systems, (please refer to Figure 1.A for additional information on the different education data source systems). While these data systems provide very useful segment specific information, there is a need to connect this data in a manner that allows for tracking students from P-20 and to link with workforce data.

On December 4, 2009, the CDE submitted a grant proposal to the IES for the SLDS that requested funding within four focus areas to develop (D) or enhance (E) elements that are not yet complete. The four focus areas are:

- Focus Area 1: Expanding Existing Systems
- Focus Area 2: Build a High Quality P-20 Longitudinal Data Warehouse
- Focus Area 3: Produce High Quality Research and Training
- Focus Area 4: Improve College and Workforce Readiness Training

Each focus area has one or more specific outcomes. Each outcome relates to establishing one or more of the twelve ACA elements. (Note: Appendix C, excerpted from our IES SLDS grant proposal, provides a cross-reference between California's proposed outcomes and the ACA Elements.)

California's SFSF Phase II Application CFDA Number: 84.394

Section II - Indicator (b)(1)

Focus Area 1: Plan to Expand Existing Systems

The primary objective of Focus Area 1 is to expand and improve existing data systems. The outcomes proposed under this focus area will lay the foundation for California to pursue the development of the California Comprehensive Education Data System (CCEDS). Specifically, the outcomes under this focus area will produce the following:

- A process for local educational agencies (LEAs) to support the acquisition and maintenance of identifiers for preschool students and related data. (Outcome 1.1 – ACA Element 2)
- The expansion of current CALPADS data collection system to include additional "core data elements" that will facilitate college and workforce readiness tracking. (Outcome 1.2 – ACA Element 12)
- An extensive reporting capability for the CDE to meet federal reporting requirements (e.g., ED*Facts*) and provide additional public reports. (Outcome 1.3 – ACA Elements 3 and 5)
- The renovation of the California State University (CSU) data system to facilitate the linkage of CSU education data to the P-20 education data warehouse. (Outcome 1.4 – ACA Element 6)

Focus Area 2: Plan to Build a High Quality P-20 Longitudinal Data Warehouse

The purpose of Focus Area 2 is to develop a P-20 longitudinal data system called the California Comprehensive Education Data System (CCEDS). The purpose of the CCEDS will be to link and report education data that spans from public pre-kindergarten through postsecondary (and eventually other appropriate non-education data from other state systems, in particular, workforce).

The CCEDS will bring together data from the CDE's California Longitudinal Pupil Achievement Data System (CALPADS) and the California Longitudinal Teacher Information Data Education System (CALTIDES), the California Community Colleges Chancellor's Office Management Information System (COMIS), the California State University Enterprise System (CSU-ES), and the University of California Corporate Student System (UC-CSS).

Specifically, the outcomes under this focus area will produce the following:

- A data conversion plan for existing K-12 and postsecondary data. (Outcome 2.1 – ACA Elements 3, 4, and 11)
- An infrastructure/platform for P-20 longitudinal data. (Outcome 2.2 – ACA Elements 3, 4, and 11)
- A functional P-20 longitudinal data system. (Outcome 2.3 – ACA Elements 1, 3, and 4)

Focus Area 3: Produce High Quality Research and Training

The objective of Focus Area 3 is to produce high quality research and training that informs decision-making and supports continuous improvement at all levels of California's education system that will move forward the key pieces of the state's strategy to better prepare our students for a brighter future. The Joint Power Authority (JPA) governance structure will assign staff the responsibility of managing the day-to-day operations of the CCEDS. Specifically, the outcomes under this focus area will produce the following:

- Ethical stewardship of P-20 cross-education segment data. (Outcome 3.1 falls under ACA Capabilities 1 and 2, but falls under no ACA Elements)
- Quality education and workforce research activities that effectively inform educational policy based on a P-20 education and workforce research agenda. (Outcome 3.2 – ACA Elements 10, 11, and 12)
- Consistent outreach to education and workforce research community and general public. (Outcome 3.3 – ACA Element 12)
- Advanced training and continuing education on best practices in data quality and data use. (Outcome 3.4 – ACA Elements 5 and 12)

The research governance and data management policies and procedures will be modeled after existing practices set forth by the Committee for the Protection of Human Subjects (CPHS). The CPHS sets the gold standard for the institutional review of personally identifiable data that is governed by the State of California. As the state institutional review board, members from the CPHS have volunteered to assist with the development of cross-segment education research governance. Furthermore, a team of CCC, CSU, and UC research faculty engaged in working with data on P-20 will be part of the key stakeholders' team, which is involved in giving feedback at all stages of the development and implementation of the data system. The researchers will, specifically, provide support in the development of guidelines for the use of the database by research for the purpose of informing policy. Recent mandates through the chaptering of SBX5 1 (Chapter 2, Statutes of 2010, Fifth Extraordinary Session) and SBX5 2 (Chapter 1, Statutes of 2010, Fifth Extraordinary Session), legislatively position the state of California to provide researchers access to individually identifiable data as permitted by Race to the Top guidance and regulations, as specified in the America COMPETES Act and in compliance with federal Family Educational Rights and Privacy Act.

Focus Area 4: Plan to Improve College and Workforce Readiness Training (D)

LEAs have been collaborating with postsecondary institutions to work with industry and community partners to develop rigorous curricula in science, technology, engineering, and mathematics (STEM). Aligned with this curricula are statewide intervention efforts intended to facilitate the transitions along educational pathways into the workforce to prepare our students for STEM fields (e.g., California Mathematics, Engineering, Science Achievement [MESA]; California Summer School for Math and Science [COSMOS]; UC College Prep; UC Statewide Summer Algebra Academies; and CalTeach). This will create a pipeline for Math and Science teachers and participation in STEM academies in high school.

The purpose of focus area four is to implement college and workforce readiness outcomes that will improve readiness tracking at the student and school level. Specifically, the outcomes under this focus area will produce the following:

- Expansion of eTranscript California. (Outcome 4.1 – ACA Element 9)
- Statewide Transcript Evaluation Services. (Outcome 4.2 – ACA Elements 4, 5, 9, and 12)
- Improved School Accountability Report Card (SARC). (Outcome 4.3 – ACA Element 5)
- College and Workforce Readiness Composite Report. (Outcome 4.4 – ACA Element 10)

California's SFSF Phase II Application CFDA Number: 84.394

Section II - Indicator (b)(1)

Timeline (Milestones)	
Focus Area 1: Plan to Expand Existing Systems	
September 2011	Implement a process for local education agencies (LEAs) to issue and maintain pre-K data using the statewide student identifier.
September 2011	Identify additional "core data elements" for K-12.
April 2011	Implement system to provide robust pre K-12 longitudinal reports.
January 2011	California State University to update current data architecture to allow for better linkages to K-12 and higher education.
Focus Area 2: Plan to Build a High Quality P-20 Longitudinal Data Warehouse	
February 2010	Establish Joint Powers Authority representing the California Department of Education, California Community Colleges, California State University, University of California, and Employment Development Department.
August 2011	Data conversion process for P-20 system in place.
October 2010	P-20 data warehouse infrastructure in place.
September 2011	P-20 data warehouse in place and linking P-20 data.
Focus Area 3: Produce High Quality Research and Training	
December 2010	Complete and implement CCEDS data access and use policies.
December 2010	Complete a comprehensive strategic plan for PK-20 research.
Focus Area 4: Plan to Improve College and Workforce Readiness Training	
September 2011	eTranscript California expanded to service all districts in California.
September 2011	Statewide Transcript Evaluation Services scaled and available to all California high schools.

Obstacles

There are no barriers in state law or policies that preclude the collection and reporting of information as described in our plan above. ***However, California is dependent on receipt of the SLDS grant funds to develop and expand our systems to contain the ACA elements.***

California's SFSF Phase II Application CFDA Number: 84.394

Section II - Indicator (b)(1)
Agencies Involved

A. Describe the agency or agencies in the State responsible for the development, execution, and oversight of the plan, including the institutional infrastructure and describe the capacity of the agency or agencies as they relate to each of those tasks;

B. Describe the agency or agencies, institutions, or organizations, if any, providing technical assistance or other support in the development, execution, and oversight of the plan, and describe the nature of such technical assistance or other support;

State of California Education Governance and Pre K-20 Education Data

There are many key entities that play a significant role in the state's public educational system. Below is a brief description of ten educational segments that govern and inform educational policies and practices. In addition, seven of the ten segments have legislative sanctions to collect and maintain information on students and teachers that transition through California's public education system for state and federal reporting purposes. A brief description of these state-level source systems is provided. Figure 3A depicts the organizational structure that will be followed to develop and implement the CCEDS and Table 2A that defines the roles and responsibilities of project team members.

Pre K-12 Education

California Department of Education & the California Longitudinal Pupil Achievement Data System

The California Department of Education (CDE), under the direction of the independently elected State Superintendent of Public Instruction (SSPI), implements education law and regulations, provides technical assistance to local educational agencies and works to reform and improve public P-12 schools. California currently serves 6.3 million students, 1,000 LEAs and 500 independently reporting charter schools. To achieve the mission of the Department and enable California to meet federal requirements, Chapter No. 1002, Statues of 2002, [SB 1453 (Alpert)] enacted *Education Code (EC)* sections 49084 and 60900 to require: (1) the assignment of a Statewide Student Identifier (SSID) as an individual, yet non-personally identifiable number to each K-12 student enrolled in a California public school; and (2) the establishment of the California Longitudinal Pupil Achievement Data System (CALPADS). The CDE received a 2006 IES SLDS grant to support the development of CALPADS.

Fiscal Crisis and Management Assistance Team / California School Information Services

The Fiscal Crisis and Management Assistance Team (FCMAT) helps California's local educational agencies fulfill their financial and management responsibilities by providing fiscal advice, management assistance, training and other related school business services. The Kern County Superintendent of Schools is the administrative and fiscal agent for FCMAT. The California School Information Services (CSIS) division of FCMAT was authorized by the State Legislature in 1997 to:

- Support the assignment and maintenance of a unique Statewide Student Identifier
- Assist with electronic state reporting
- Enable electronic records transfer
- Build local capacity to implement and maintain comparable, effective and efficient pupil information systems that will support their daily program needs, assist local education agencies in improving the outcomes of pupils, and promote the use of information for educational decision making by school site, district office, and county staff

To accomplish this purpose, CSIS supports all 1,500+ California LEAs in their efforts to collect, maintain, use and share high quality student-level data. CSIS assists the CDE with CALPADS by providing training and technical assistance to LEAs on CALPADS. Once the CALPADS vendor satisfies its contractual obligations for development of CALPADS, CSIS will also provide technical support for CALPADS. In addition to its CALPADS responsibilities, CSIS provides records transfer services and address validation services to LEAs.

State Board of Education

Although the California State Board of Education (SBE) does not actively collect education data, the SBE serves as the governing and policy-determining body of the CDE and sets K-12 education policy in standards, curriculum, instructional materials, and assessments. The members of the SBE are appointed by the Governor. The Board is currently providing guidance and working with Superintendent O'Connell to improve the collection of California Pre K-12 education data and is actively contributing to the state's comprehensive approach to education reform that will be used to address the requirements of America COMPETES Act and Race to the Top.

K-12 Teacher Preparation

The Commission on Teacher Credentialing & the California Longitudinal Teacher Integrated Data Education System

The Commission on Teacher Credentialing (CTC) is in the Executive Branch of California State Government that functions as an independent state standards board for educator preparation for the public schools of California, the licensing and credentialing of professional educators in the State, the enforcement of professional practices of educators and the discipline of credential holders in the State of California. In 2006, Chapter Number 840, Statutes of 2006 [SB 1614 (Simitian)] enacted *Education Code* sections 10600, 44230.5, and 60900, permanently authorizing the California Longitudinal Teacher Integrated Data Education System (CALTIDES) and the Commission on Teacher Credentialing (CTC) to assign Statewide Educator Identifiers (SEIDs) to all educators who applied to CTC for a credential or authorization. The CALTIDES will be the new comprehensive system environment that primarily entails integrating existing databases to enable the retention of longitudinal educator data to meet federal and other state reporting requirements, to facilitate assignment monitoring, and to conduct high quality program evaluations. The CALTIDES is being jointly developed with CTC and will be partially funded with a 2009 IES SLDS grant (this system is still under development).

Postsecondary Education

California Community Colleges & the Chancellor's Office Management Information System

The CCCCO operates under the direction of the state chancellor who is guided by the Board of Governors. The Chancellor's Office is charged with providing leadership, advocacy and support for the California Community Colleges. Serving as the administrative branch of the California Community College system, the Chancellor's Office is also responsible for allocating state funding to the colleges and districts. The California Community Colleges Chancellor's Office has managed the Management Information System (COMIS) since 1992. The COMIS is a consolidated longitudinal data system that collects and stores student-level information from all 110 community colleges. COMIS also contain data on staff that may be linked to students (see Table 1A for specific elements).

California's SFSF Phase II Application CFDA Number: 84.394

Section II - Indicator (b)(1)

California State University & the Enterprise System

The California State University (CSU) System oversees 23 campuses with approximately 450,000 students and 48,000 faculty and staff. The Chancellor's Office for the California State University has managed their Enterprise System (ES), which includes the Enrollment Reporting System (ERS), the Academic Planning Database System (APDB), and the Personnel Information Management System (PIMS) for many decades. These siloed systems store student level information, section and faculty information, and faculty/administrator/staff information (see Table 1A for specific elements).

University of California maintains the Corporate Student System and is adding a Decision Support System

The University of California (UC) Office of the President maintains a Corporate Student System (CSS) consisting of data from all graduate and undergraduates in its ten-campus system (see Table 1A for specific elements). This includes data from Undergraduate Admission, Graduate Admissions, Financial Aid, Registrants, Undergraduate Longitudinal (including retention-graduation-time to degree by entering cohort), and Graduate Longitudinal. University of California's StatFinder tool, http://statfinder.ucop.edu, also maintained at the office of the President provides undergraduate admission and longitudinal outcomes data for individual California high schools and California Community Colleges as well as general statistics in these areas. Separate from the student systems, there are corporate databases for personnel, budget, contracts and grants, and other institutional data.

Most importantly, the University of California is in the process of modernizing, revamping, and expanding its databases into an integrated Decision Support System (DSS). For example, access to database structures will be provided via Business Objects and Crystal Reports. Data elements important to this project, such as UC course records and grades, will be added.

California Postsecondary Education Commission

The California Postsecondary Education Commission (CPEC) was established by Chapter 1187 of the Statutes of 1973, Education Code Section 66900-66906 to serve as the planning and coordinating body for higher education. The Commission provides the legislative and executive branches of government with advice and information about major policy and planning issues concerning education beyond high school. The California Postsecondary Education Commission (CPEC) has longitudinal enrollments and awards data for the three public higher education systems going back to 2000-01 for UC and CSU, and to 1992-93 for the community colleges. The data was provided in accordance with Chapter 916, Statutes of 1999, which authorizes CPEC to use a student identifier in its data system in order to conduct longitudinal studies of the progress of individual students. The data delivered to CPEC contains social security numbers, so it could be matched to wage data in the California Employment Development Department's employment security files. CPEC has procedures in place to detect invalid or implausible social security numbers, and to replace social security numbers with non-traceable identification codes before CPEC research staff use the data. The enrollment file contains an identified record for each student for each term that includes a variety of information including birth date, ethnicity, former high school, major, student status, and number of units. The awards file has similar data with the discipline and level of the degree or certificate awarded.

Each higher education system uses different coding systems to indicate students' ethnicity, status, former high school, and other characteristics. CPEC has developed a comprehensive crosswalk system that converts all data elements into a single coding system. This means that comparisons between systems and tracking of students who change systems in the course of their education can be done quickly and easily.

State Representative Sample of Pre K-20

California Partnership for Achieving Student Success

California Partnership for Achieving Student Success (Cal-PASS) is a voluntary data-sharing collaboration. Funded by the State of California and major foundations, this service is free to participating schools and colleges. Most school districts, all 110 community colleges, ten UCs, and 19 out of 23 CSUs share their data. Without divulging student identities, Cal-PASS enables practitioners to track cohorts' progress from kindergarten through middle school and college. The data indicates how many of their students required remediation in college and how many persisted through the first year and beyond. With Cal-PASS, a series of professional learning councils have been instituted to improve instruction and results. By making comparative data more readily available, Cal-PASS helps educators spot curricular misalignments and design interventions to improve student success rates. It engages teachers and college faculty from the same disciplines to meet monthly in professional learning councils, where they work closely and collectively to diagnose strengths and weaknesses and align school and college curricula. Twelve hundred educators, grouped by discipline (i.e., English language arts, ESL, math, science and social science) participate in more than 60 councils across California. Aided by Cal-PASS regional coordinators and research staff, this grassroots network adds force to members' recommendations for better methods of teaching. These teacher-to-teacher insights come from the front lines, not the top down (see Table 1A for specific elements).

Current Education-Workforce Linkages

Chapter 272, Statutes of 2007, authorizes the Chancellor of the California Community Colleges, in accordance with the requirements of Section 84754.5 of the Education Code, to obtain quarterly wage data from Employment Development Department's (EDD) employment security files. This collection began in 1993 on students who attended one or more community colleges in order to assess the impact of education on the employment and earning of students, to conduct an annual evaluation of district-level and individual college performance in achieving priority educational outcomes, and to submit required reports to the Legislature and Governor. The next phase is to expand this legislation so that all education segments (CDE, CSU, and UC) will have the same relationship with EDD to link education data with workforce data.

California Secretary of Education

The Secretary serves as a member of the Governor's cabinet and advises the Governor on all educational issues from preschool through higher education. The Office of the Secretary of Education (OSE) has a small staff of experienced education and policy experts committed to creating, supporting, and promoting the Governor's education policies and related legislation to ensure that all California children have access to quality education. The OSE collaborates with the other education segments on the state's comprehensive plan to education reform.

Recently, the Governor and the State Superintendent of Public Instruction have been working with a broad-based coalition committed to improving education data and creating a continuous learning system in California's public schools. The coalition includes educators, parents, business leaders, researchers, and community-based organizations. As part of this effort, the OSE and the CDE together commissioned a report entitled *Framework for a Comprehensive Education Data System in California: Unlocking the Power of Data to Continually Improve Public Education,* which was funded by the Bill & Melinda Gates Foundation and the William and Flora Hewlett Foundation. This report reflects more than a year of research and analysis conducted by McKinsey & Company, a global management-consulting firm. Their research included in-depth interviews with parents, teachers, administrators, policymakers, and other advocates for students and schools in California.

The key recommendations presented in this report require significantly expanding and linking information from California's K-12 system to data from higher education, social services, pre-kindergarten, and the workforce.

Specifically, the report recommends that California consider the following:

- Continue building and expanding CALPADS and CALTIDES.
- Improve the quality of data collected by providing the appropriate training to responsible staff.
- Build more advanced systems that create interagency linkages and provide cross-segment data.
- Expand the use of data to improve instruction and help policymakers to make better-informed decisions about education policy.

Overall, the report concludes that a comprehensive data system will provide powerful information about what is working and what is lacking in our public schools. This system will also provide stronger measures on how effectively public schools are preparing students for college and careers. Across all the recommendations, the report stresses that the proposed enhancements to California's education data systems can and should be done in a way that protects student and teacher privacy and security, while allowing for transparency and accountability system-wide.

Aside from the budget crisis currently afflicting the state, California is now in a better position to implement the recommendations proposed by the 2008 McKinsey report with recent legislation. In particular, Chapter 561, Statutes of 2008 [SB 1298, (Simitian)] and more recently in Chapter 159, Statutes of 2009 [SB 19, (Simitian)] inform California's strategic plan for longitudinal data systems in two phases. Chapter 561, Statutes of 2008 [SB 1298, (Simitian)] authorized the creation of the Data Governance Working & Advisory Group, which includes representatives from the ten entities described above, as well as representatives from other many organizations including:

- California Assembly Education Budget Subcommittee
- California Assembly Education Policy Committee
- California Senate Education Budget Subcommittee
- California Senate Education Policy Committee
- Department of Finance
- Legislative Analyst's Office
- American Institute for Social Justice
- Association of Community Organizations for Reform Now
- Association of California School Administrators
- California Association of School Business Officials
- California Department of Social Services
- California Federation of Teachers
- California School Boards Association

This group met on a monthly basis and provided the governance structure that will be used to build and maintain the CCEDS. In addition, members of this group will continue to meet and serve as the external stakeholder working group to this project.

The second phase of Chapter 561, Statutes of 2008 [SB 1298, (Simitian)] and later Chapter 159, Statutes of 2009 [SB 19, (Simitian)], attends to the technical aspects of building the comprehensive data system. The State Chief Information Officer must form a working group and an advisory committee to the working group that consists of public education segments and other governmental entities that collect, report, or use individual pupil education data that would become part

of the comprehensive education data system. The working group authorized by Chapter 159, Statutes of 2009 [SB 19, (Simitian)] is responsible for producing a strategic plan to link education data systems from all segments that will accomplish all of following:

1) Provide an overall structural design for the linked education data systems.
2) Examine current state education data systems.
3) Examine the protocols and procedures to be used by state agencies in data processing, including, but not limited to: collecting, storing, manipulating, sharing, retrieving, and releasing data to enable each state agency to accurately and efficiently collect and share data with the other state agencies, while complying with all applicable state and federal privacy laws.
4) Identify specific procedures and policies necessary to ensure the privacy of pupil record information, while meeting both federal requirements and the higher expectations of privacy held by the state.
5) Identify specific procedures and policies that would facilitate the transfer of data from one segment to another and ultimately to include linkages to workforce data.

Overall, these data systems provide very useful segment specific information, but there is a need to connect these data systems in a manner that allows for tracking students from pre K-20 and to link with workforce data. The Longitudinal Data Technical Working Group authorized by Chapter 159, Statutes of 2009 [SB 19, (Simitian)] has been meeting regularly and will produce a report that will serve to advise Outcome 2.2 and the direction of the CCEDS project. The Office of the State Chief Information Officer (OCIO) report will inform Outcome 2.2 and provide guidance on how California should approach the development of the CCEDS. By mapping P-20 pathways of highly mobile students (such as children of migrant workers) or students whose academic pathways are interrupted (by early parenthood, illness, etc.), educators will be able to re-establish or build "second chance" educational pathways more effectively.

California's SFSF Phase II Application CFDA Number: 84.394

Section II - Indicator (b)(1)

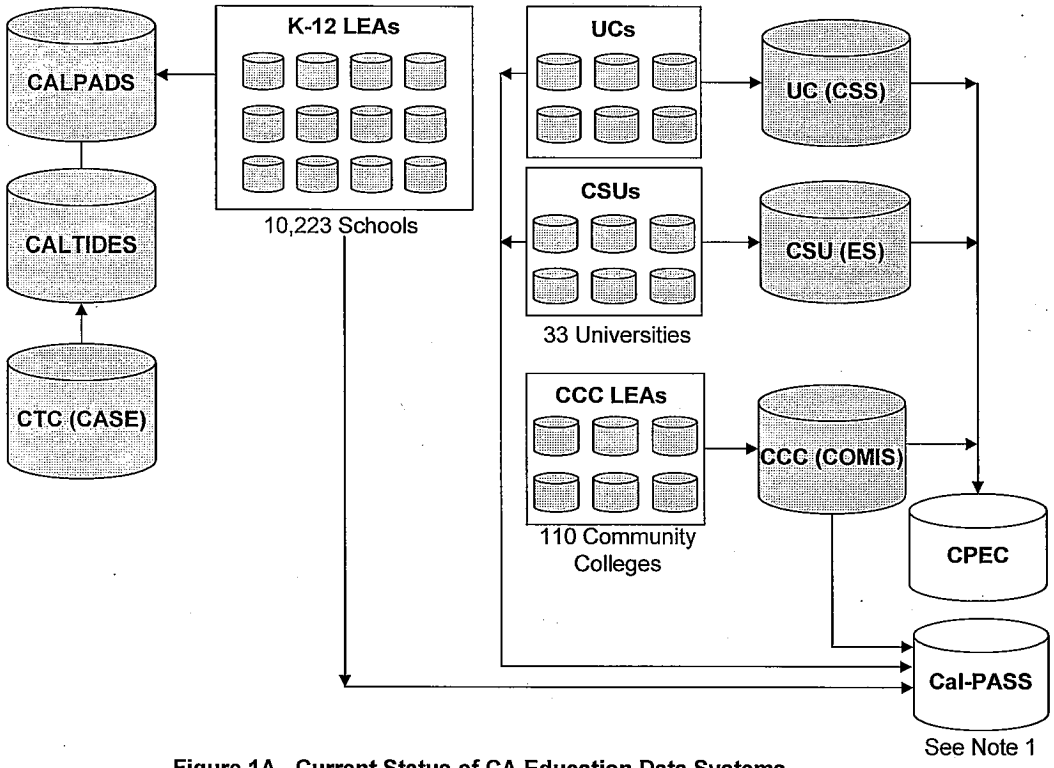

Figure 1A. Current Status of CA Education Data Systems

Note 1: Not statewide data.

California's SFSF Phase II Application CFDA Number: 84.394

Section II - Indicator (b)(1)

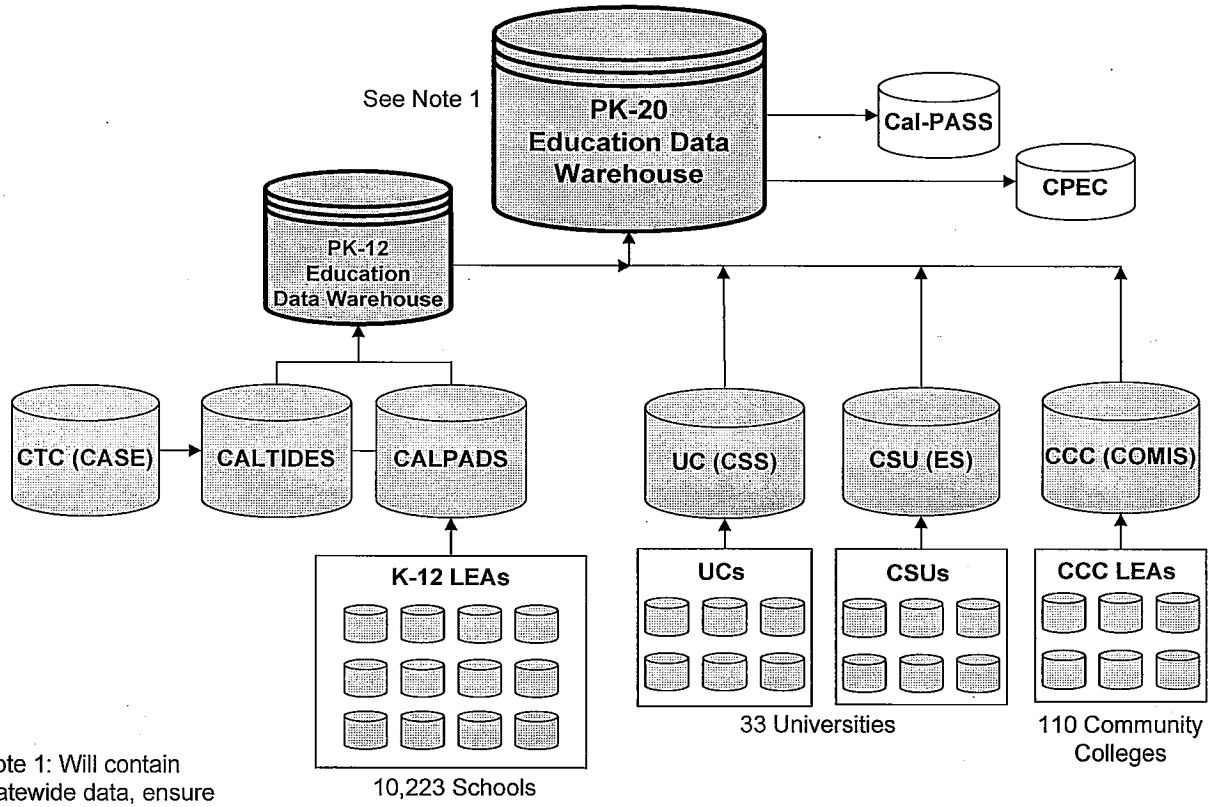

Note 1: Will contain statewide data, ensure good quality data, and eliminate duplicate reporting for LEAs.

Figure 2A. PK-20 Longitudinal Data Warehouse

California's SFSF Phase II Application CFDA Number: 84.394

Section II - Indicator (b)(1)

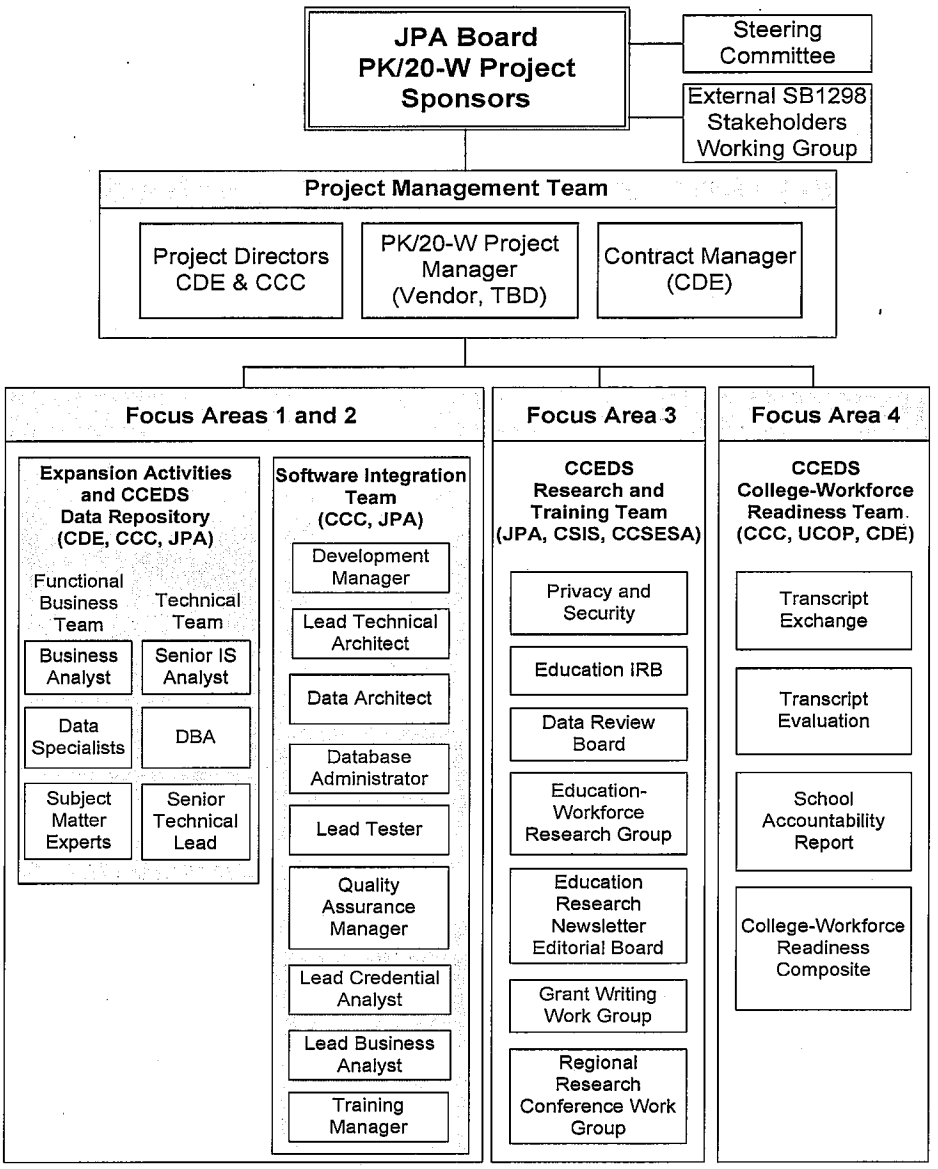

Figure 3

Table 2A: Roles and Responsibilities of Project Team Personnel - Project Team Responsibilities	
Project Sponsors **Rick Miller CDE (5%), Patrick Perry CCC (5%),** **Marsha Hirano-Nakanishi (25%), CSU, Marsha Kelman UC (5%)**	**Project Directors** **Keric Ashley, CDE (25%), Patrick Perry, CCC (45%),** **Michelle Magyar, CDE (60%)**
• Serves as the business decision-makers of the project. • Resolves significant issues and scope changes that can not be resolved by the CCEDS Project Management Team. • Makes the final decision on the vendors retained throughout the CCEDS Project. • Attends monthly CCEDS Project Management Team meetings. • Attends Steering Committee meetings. • Attends Working Group meetings. • Communicates project status to JPA management and other stakeholders.	• Assists in the coordination of work efforts that may impact the project. • Resolves significant project issues. • Attends weekly project meetings. • Attends monthly risk meetings. • Attends monthly CCEDS Project Management Team meetings. • Leads Steering Committee meetings. • Leads Working Group meetings. • Communicates project status to internal and external stakeholders, as needed. • Makes policy decisions. • Directs staff.
Project Manager **Bonnie Edwards, CCC (100%)**	**Contract Manager** **Sonya Edwards, CDE (50%)**
• Coordinates and oversees project activities. • Develops project management-related deliverables. • Serves as a liaison between vendors and internal/external stakeholders. • Resolves and tracks project issues. Proposes actions or strategies to resolve significant project issues. • Maintains Issues Database and Change Management Database. • Maintains project Master Schedule. • Tracks project budget and reviews vendor invoices. • Maintains a Business Plan document. • Reviews and approves all Deliverable Expectation Documents (DEDs) and final deliverables. • Reviews all project deliverables. • Coordinates and conducts CCEDS Project Management Team meetings. • Attends Steering Committee & Working Group meetings. • Conducts weekly Project Team Meetings. • Develops weekly project status reports.	• Participates in the procurement processes to secure all vendor services including RFP development services, Project Management Services, Independent Project Oversight services, and Prime development vendor services. • Reviews and approves invoices. • Maintains information on contracted costs vs. actual costs. • Manages contract change requests and addendums. • Serves as liaison to control agencies, Department of General Services and Department of Finance.

Table 2A: Roles and Responsibilities of Project Team Personnel - Project Team Responsibilities	
External Stakeholders Working Group (SB 1298) **CTC, CPEC, Cal-PASS, OSE, OCIO, DOF**	**Functional Business Team** **Focus Areas 1 and 2**
• Assists in the identification of business needs and defines business policies and procedures. • Confirms project scope. • Assists with the resolution of project issues. • Attends Working Group meetings. • Communicates project status to respective external stakeholders, as needed.	• Defines current and future data elements, data relationships, and data definitions. • Designs logical data model and develops data dictionary. • Conducts data model walkthrough sessions. • Develops and maintains physical data model. • Serves as a resource to the Software Integration team. • Assists in the definition of business processes and business rules. • Assists in the identification of potential new policies and procedures. • Participates in interviews and working sessions with the CCEDS project team. • Participates in system integration and user acceptance testing.
Technical Team **Focus Areas 1 and 2**	**Software Integration Team** **Focus Areas 1 and 2**
• Coordinates and oversees the establishment and operation of the CCEDS Project's technological environment including the server(s), project team's workstations, network connection, development software, and database environment. • Participates in the determination of technology architecture required for system interfaces. • Participates in the procurement processes to secure all vendor services including RFP development services, Project Management services, Independent Project Oversight services, Prime development vendor services. • Attends monthly CCEDS Project Team meetings. • Participates in meetings with the Department of Technological Services (DTS). • Participates in the development for knowledge and transfer in order for the state to maintain the system upon implementation and warranty.	• Designs and develops the CCEDS environment as defined by the functional requirements and business needs. • Conducts prototyping sessions with internal and external stakeholders. • Conducts system design and development walkthrough sessions. • Conducts unit and Systems Integration tests. • Develops test cases for user acceptance testing. Oversees user acceptance testing. • Develops system documentation. • Determines technology architecture required for system interfaces. • Coordinates with representatives from other internal and external systems to which CCEDS will interface. • Designs, tests, and documents system interfaces. • Defines and implements new business processes. • Assess organizational impact. • Designs business processes and transaction steps.

Table 2A: Roles and Responsibilities of Project Team Personnel - Project Team Responsibilities	
Governance and Research & Training Team **Focus Area 3**	**Education-Workforce Indicator Team** **Focus Area 4**
• Attends monthly meetings. • Develops policies that govern the management of the CCEDS. • Develops access protocols and procedures. • Coordinates strategic plans for research.	• Attends monthly meetings. • Develops College and Workforce Readiness Reports. • Assists with College and Workforce Research & Training. • Coordinates readiness stakeholder meetings.

Funding

(C) Provide the overall budget for the development, execution, and oversight of the plan;

Integrated Student/Teacher Information System

The CDE has requested $20 million under the IES SLDS grant proposal.

Also, the CDE has requested $266,000 in 2010-11 that will partially fund the CDE's activities to establish a process to coordinate with postsecondary agencies to report the following required data: number of graduates above successful in first-year attendance.

Nature and Frequency of Reports

(D) Describe the way the state will publicly report the plan and the State's progress reports on its plan, including the nature and frequency of updated reports to the public on State actions taken under the plan and the website where the State will make the plan and progress reports publicly available (as defined in the Notice of Final Requirements, Definitions, and Approval Criteria for the SFSF Phase II).

On a quarterly basis, the state will provide an update on the state's progress in developing a SLDS that includes the Twelve ACA elements via a web page on the California Department of Education's Web site.

California's SFSF Phase II Application CFDA Number: 84.394

Section II - Indicator (b)(1)

IES SLDS Grant Proposal - Appendix C - Current Status of State's Longitudinal Data System		
SLDS Requirement	**Current Status**	**Project Outcomes**
Capability 1. Enable State to examine student progress over time.	**Partially complete:** one out of the seven systems has the ability to track students kindergarten through grade twelve, to postsecondary and into the workforce for a sample of schools in the state. The CALPADS system (part of the development was funded by a previous IES grant) provides the capability to track students kindergarten through grade twelve, but not onto postsecondary. The current grant will be used to develop the capability of linking pre K-20 and workforce data.	1.1, 1.2, 1.3, 2.1, 2.2, 2.3, 3.1, 4.2, 4.3, 4.4
Capability 2. Facilitate and enable the exchange of data among agencies and institutions within the State and between States.	**Partially complete:** one postsecondary system contains data from the workforce agency. The current grant will be used to establish a data governance for data sharing, to develop a central P-20 system (Outcomes 2.1, 2.2, 2.3), and to strengthen CSU capacity as part of this requirement (Outcome 1.4).	1.4, 2.1, 2.2, 2.3, 3.1, 4.2
Capability 3. Link student data with teachers.	**Partially complete:** three out of seven systems currently have this capability for kindergarten through grade twelve data. Only the CALPADS system, one of the three that have this capability, was partially funded by a previous IES grant. The current grant will be used to expand this capability to CSU's data system (Outcome 1.4)	1.4
Capability 4. Enable matching teacher's information with their certification and teacher preparation programs.	**Currently under development:** the CALTIDES system (funded by a previous IES grant) is designed to link student and teacher data via the course section record.	Not applicable.
Capability 5. Enable data to be easily generated for continuous improvement and decision-making, etc.	**Partially complete:** three out of the state's seven systems currently have the capability of providing data and reports that support continuous learning. The current grant will be used to expand data collected in the CALPADS system (Outcome 1.2), develop a robust kindergarten through grade twelve reporting system (Outcome 1.3), provide training and best practices on data use (outcome 3.4) and scale Transcript Evaluation Services to statewide with more timely turnaround of results (Outcome 4.2). An IES grant assisted in the development of CALPADS; however, the scope of data collected in CALPADS needs to be expanded. ***Note:*** *California plans to seek funding through RTTT that can be provided to districts (or regional support centers) to support systems that provide student-level analytical reports.*	1.2, 1.3, 3.4, 4.2

California's SFSF Phase II Application CFDA Number: 84.394

Section II - Indicator (b)(1)

IES SLDS Grant Proposal - Appendix C - Current Status of State's Longitudinal Data System		
SLDS Requirement	**Current Status**	**Project Outcomes**
Capability 6. Ensure the quality and integrity of data contained in the system.	**Partially complete:** the CALPADS system (part of the development was funded by a previous IES grant) contains numerous data edit checks and the CDE is planning for data verification checks through monitoring and annual audits. The current grant will be used to improve data quality issues with CSU's system (Outcome 1.4). Funds will also be used to establish data linkages between CALPADS and UC's Transcript Evaluation Services (TES), which will provide a verification of course data districts submit to CALPADS and expand the number of school counselors (and staff) who can use TES services while providing a return on investment to districts for having submitted course data to CALPADS (Outcome 4.2).	1.4, 4.2
Capability 7. Provide the State with the ability to meet reporting requirements of the Department.	**Partially complete:** the CALPADS system (part of the development was funded by a previous IES grant) will provide data (e.g., unduplicated student counts) that the CDE has historically been unable to submit. Funds awarded under this grant will be used to develop a separate system that provides centralized student-data complex reporting based on information gathered by CALPADS (Outcome 1.3).	1.3
With respect to preschool through grade 12 education and postsecondary education:		
Element 1. A unique non-personally identifiable statewide student identifier.	**Partially complete:** four out of the seven systems adopt a unique identifier. The CALPADS system (part of the development was funded by a previous IES grant) provides and maintains the SSID. The current grant will be used to establish P-20 data with a unique non-personally identifiable statewide identifier (Outcome 2.3).	2.3
Element 2. Student-level enrollment, demographic, and program participation.	**Complete** for K-12 in CALPADS (part of the development was funded by a previous IES grant). The current grant will be used to expand student level data to include pre-K (Outcome 1.1).	1.1
Element 3. Student-level information about the points at which students exit, transfer in, transfer out, drop out, or complete P-16 education programs.	**Partially complete:** higher education needs to collect exit data (they collect withdraw reason) and capture transfer through enrollment status. CALPADS (part of the development was funded by a previous IES grant) provides student enrollment and exit information (including transfer). The current grant will be used to provide reports on student exit status for kindergarten through grade twelve (Outcome 1.3) and for student transfer to postsecondary and exit status from postsecondary (Outcomes 2.1, 2.2, 2.3).	1.3, 2.1, 2.2, 2.3
Element 4. The capacity to communicate with higher education data systems.	**Partially complete:** two of the seven systems (neither of which were developed through a previous IES grant) have the ability to communicate with higher education, current grant will be used to connect K-12 data with higher education data (Outcomes 2.1,2.2 and 2.3) and ensure the data coming from CSU's system into the P-20 system is improved (Outcome 4.2).	2.1, 2.2, 2.3, 4.2

California's SFSF Phase II Application CFDA Number: 84.394

Section II - Indicator (b)(1)

IES SLDS Grant Proposal - Appendix C - Current Status of State's Longitudinal Data System		
SLDS Requirement	**Current Status**	**Project Outcomes**
Element 5. A state data audit system assessing data quality, validity, and reliability.	**Under development:** states need further guidance as to what the federal government wants in this area. (No grant funds currently devoted to this element.) In the meantime, the CDE is researching other state practices and exploring options for auditing data such as on-site monitoring, annual audits, and cross-collection comparisons. Funds used under this grant will be used to develop complex reports for the public and researchers (Outcome 1.3) and improve the School Accountability Report Card (Outcome 4.3) - data use always provides a good feedback for data quality; provide training and continuing education on data quality and data use (Outcome 3.4), and improve the data quality of CSU's system (Outcome 4.2).	1.3, 1.4, 3.4, 4.2, 4.3
With respect to preschool through grade 12 education:		
Element 6. Yearly test records of individual students.	**Under development:** the state is planning to load statewide assessment results data into the CALPADS system (part of the development was funded by a previous IES grant) this coming spring.	Not applicable.
Element 7. Information on students not tested, by grade and subject.	**Under development:** the state is planning to load statewide assessment results data into the CALPADS system (part of the development was funded by a previous IES grant) this coming spring.	Not applicable.
Element 8. A teacher identifier system with the ability to match teachers to students.	**Completed:** information is currently collected in CALPADS (part of the development was funded by a previous IES grant). Additional information will be collected through CALTIDES project that is partially funded with the 2009 IES SLDS grant. Also, the CALTIDES system will generate a non-personally identifiable indicator for teachers.	Not applicable.
Element 9. Student-level transcript information, including information on courses completed and grades earned.	**Partially completed:** course information is currently collected in CALPADS (part of the development was funded by a previous IES grant). The current grant will be used to expand this functionality to include standardizing transcript content (Outcome 4.1) and add an evaluation service of course history (Outcome 4.2).	4.1, 4.2
Element 10. Student-level college readiness test scores.	Currently collect SAT/ACT as part of application for CSU and UC. State assessment scores are collected through CALPADS (part of the development was funded by a previous IES grant). Plan is to use current grant funds to expand CALPADS functionality to include the collection of EAP scores, AP test scores, and MESA (Outcome 1.2), use that data for research (Outcome 3.2) and generate a college and workforce readiness composite report (Outcome 4.4).	1.2, 3.2, 4.4
With respect to postsecondary education:		

California's SFSF Phase II Application CFDA Number: 84.394

Section II - Indicator (b)(1)

IES SLDS Grant Proposal - Appendix C - Current Status of State's Longitudinal Data System		
SLDS Requirement	**Current Status**	**Project Outcomes**
Element 11. Information regarding students transition.	**Partially complete**: four of the seven collect information on remedial courses; the current SLDS grant will be used to expand this collection to CSU and UC. CALPADS is the only system that was partially developed using IES grant funds. The current grant will be used to build a high quality P-20 longitudinal data warehouse (Outcomes 2.1, 2.2, 2.3), which can be used for education and research (Outcome 3.2).	2.1, 2.2, 2.3, 3.2
Element 12. Provide other information determined necessary to address alignment and adequate preparation for success in postsecondary education.	Will expand CALPADS (part of the development was funded by a previous IES grant) functionality to include other "core data elements" such as attendance (Outcome 1.2); generate new reports based on the education and workforce research agenda (Outcome 3.2); ensure that the P-20 data collected are relevant given the latest research findings (Outcome 3.3); ensure district and school staff are trained to use the data (Outcome 3.4); and align course data (Outcome 1.4 and 4.2). With CCEDS the state will be capable to link K-12 to higher education data to evaluate test scores and course taking patterns.	1.2, 3.2, 3.3, 3.4, 4.2

Indicator (b)(2)	Indicate whether the State provides student growth data on their current students and the students they taught in the previous year to, at a minimum, teachers of reading/language arts and mathematics in grades in which the State administers assessments in those subjects in a manner that is timely and informs instructional programs.

Please respond (check Yes or No): Does the State provide student growth data on their current students and the students they taught the previous year to, at a minimum, teachers of reading/language arts and mathematics in grades in which the State administers assessments in those subjects, in a manner that is timely and informs instructional programs?

☐ Yes. You are not required to provide further information. In Part 3B, Section III, check "Not Applicable."

☒ No. Provide a plan for providing this information to teachers in Part 3B, Section III.

Part 3B: SFSF Data Collection and Public Reporting Plan

Process and timeline for developing and implementing indicators by September 30, 2011

Indicator: (b)(2)

Indicate whether the State provides student growth data on their current students and the students they taught in the previous year to, at a minimum, teachers of reading/language arts and mathematics in grades in which the State administers assessments in those subjects in a manner that is timely and informs instructional programs.

Contact Person/Division: Rachel Perry, Academic Accountability & Awards Division/ J.T. Lawrence, Statewide Assessment Division	**Expected date of implementation:** August 2011

Indicator: (b)(2)

Plan (D)

Brief Description of Plan: Recent mandates through the chaptering of AB 1130 (Chapter 273, Statutes of 2009), legislatively position the state of California to establish of a methodology for measuring academic achievement by cohort to more accurately measure academic growth for schools and districts by providing the ability to determine both achievement and growth toward proficiency. California has examined the feasibility of using growth measures. The plan is to develop alternate growth models with or without the development of a vertical scale. The State will deliver this information to teachers through data disks, file layouts and data reports that may be disaggregated by teachers that are provided to the districts. These reports are available in mid-August for the previous year's testing. We plan to make such reports more easily available through on-line delivery. Pending funding, future reports would include appropriate student growth information.

Expected Report (Title)	Source to Publish Data	Frequency of Updates/Reports
Report on Pilot Growth Study	CDE Web Portal/Testing and Accountability	February 2011
State, LEA, and Teacher Report	Mailed to LEAs and state level LEA reports online	September 2011

Development

Milestone	Date	Potential Obstacles
1. Initial Development including conduct data simulations using 2007-08 and 2008-09 assessment results develop options for growth targets; evaluate various statistical techniques for computing growth projections. Pending State Board of Education approval.	December 2010	Cost/funding
2. Pilot growth model and report pilot results.	February 2011	
3. Implement final growth model for RTTT schools and LEAs in 2010-2011. Accountability determinations will be reported in fall of 2011.	August 2011	
4. School and Local Education Agency level and teacher reports will provide information to teachers on status (i.e., percent proficient or above) and growth (i.e., improvement in student achievement from one year to the next).	September 2011	

California's SFSF Phase II Application CFDA Number: 84.394

Section III - Indicator (b)(2)

Indicator: (b)(2)			
Implementation			
	Agency/Division	**Estimated Cost (C)**	**Funding Source (Federal, State, or Local)**
Development (A)	CDE	$25,000	Federal funds
Execution (A)	Contractor	$1,500,000	
Oversight (A)	CDE	$75,000	
Technical Assistance (B)	Technical Advisory Group	$25,000	

California's SFSF Phase II Application CFDA Number: 84.394
Section IV - Indicator (b)(3)

Indicator (b)(3)	Indicate whether the State provides teachers of reading/language arts and mathematics in grades in which the State administers assessments in those subjects with reports of individual teacher impact on student achievement on those assessments.

Please respond (check Yes or No): Does the State provide teachers of reading/language arts and mathematics in grades in which the State administers assessments in those subjects with reports of individual teacher impact on student achievement on those assessments?

☐ Yes. You are not required to provide further information. In Part 3B, Section IV, check "Not Applicable."

☒ No. Provide a plan for providing this information to teachers in Part 3B, Section IV.

Part 3B: SFSF Data Collection and Public Reporting Plan

Process and timeline for developing and implementing indicators by September 30, 2011

Indicator:(b)(3)

Indicate whether the State provides teachers of reading/language arts and mathematics in grades in which the State administers assessments in those subjects with reports of individual teacher impact on student achievement on those assessments.

Contact Person/Division:	Expected date of implementation:
Rachel Perry, Academic Accountability & Awards Division/ J.T. Lawrence, Statewide Assessment Division	August 2011

California's SFSF Phase II Application CFDA Number: 84.394
Section IV - Indicator (b)(3)

Indicator: (b)(3)

Plan (D)

Brief Description of Plan:

Provide individualized teacher reports by classroom and grade that include changes in scores from the previous year and comparison of scores to districts and statewide data.

Expected Report (Title)	Source to Publish Data	Frequency of Updates/Reports
Report on Pilot Growth Study	CDE Web Portal/Testing and Accountability	February 2011
State, LEA, and Teacher Report	Mailed to LEAs	September 2011

Development

Milestone	Date	Potential Obstacles
1. Initial Development including conduct data simulations using 2007-08 and 2008-09 assessment results develop options for growth targets; evaluate various statistical techniques for computing growth projections. Pending State Board of Education approval.	December 2010	Cost/funding
2. Pilot growth model and report pilot results.	February 2011	
3. Implement final growth model for RTTT schools and LEAs in 2010-2011. Pending State Board of Education approval.	August 2011	
4. School and Local Education Agency level and teacher reports will provide information on status (i.e., percent proficient or above) and growth (i.e., improvement in student achievement from one year to the next).	September 2011	

California's SFSF Phase II Application CFDA Number: 84.394
Section IV - Indicator (b)(3)

Indicator: (b)(3)			
Implementation			
	Agency/Division	Estimated Cost (C)	Funding Source (Federal, State, or Local)
Development (A)	CDE	$15,000	Contingent on receipt of federal funds.
Execution (A)	Contractor	$970,000	
Oversight (A)	CDE	$5,000	
Technical Assistance (B)	Technical Advisory Group	$10,000	

California's SFSF Phase II Application CFDA Number: 84.394

Section V – Indicators (c)(11) and (c)(12)

Indicator (c)(11)	**Provide, for the State, for each LEA in the State, for each high school in the State and, at each of these levels, by student subgroup (consistent with section 1111(b)(2)(C)(v)(II) of the ESEA), of the students who graduate from high school consistent with 34 CFR 200.19(b)(1)(i), the number and percentage (including numerator and denominator) who enroll in an institution of higher education (IHE) (as defined in section 101(a) of the Higher Education Act of 1965, as amended (HEA)) within 16 months of receiving a regular high school diploma.**

Please respond (check one): Does the State collect these data (as defined in Indicator (c)(11))?

[1] ☐ Yes, the State collects these data.

If Yes, please respond (check one):

[2] ☐ The State makes the data *publicly available* and updates the data *at least annually* on a website.

➔ Provide the State website where the data are collected and publicly available:[3] Click here to enter text.

[4] ☐ The State makes the data *publicly available* on a website and updates the data *less than annually.*

➔ Provide the State's plan for making the data publicly available and updating it annually on a website in Part 3B. Mark the Public Reporting column next to "Indicator (c)(11)" in the Plan Element Verification Chart in Part 3B, Section I.
➔ Provide the State website where the data are collected and publicly available:[5] Click here to enter text.

[6] ☐ The State does not make the data publicly available on a website.

➔ Provide the State's plan for making the data publicly available and updating it annually on a website in Part 3B. Mark the Public Reporting column next to "Indicator (c)(11)" in the Plan Element Verification Chart in Part 3B, Section I.

7 ☒ No, the State does not collect these data.

If No, please respond (check one):

☒ The State will develop and implement the means to collect and publicly report the data (i.e., the State will collect and publicly report the data) by September 30, 2011.

➔ Provide the State's plan for collecting, making the data publicly available, and updating it annually on a website in Part 3B, Section I. Mark both the Collection and Public Reporting columns next to "Indicator (c)(11)" in the Plan Element Verification Chart in Part 3B, Section I.

☐ The State will develop but not implement the means to collect and publicly report the data (i.e., the State will not collect and publicly report the data) by September 30, 2011.

➔ Provide the State's plan for developing the means to collect and to publicly report the data (but not the State's implementation of those means) in Part 3B, Section V.

California's SFSF Phase II Application CFDA Number: 84.394

Section V – Indicators (c)(11) and (c)(12)

Part 3B: SFSF Data Collection and Public Reporting Plan

Process and timeline for developing and implementing indicators by September 30, 2011

Indicator: (c)(11)

Provide, for the state, for each local educational agency in the state, for each high school in the state and, at each of these levels, by student subgroup (consistent with section 1111(b)(2)(C)(v)(11) of the ESEA), of the students who graduate from high school consistent with 34 CFR 200.19(b)(1)(i), the number and percentage (including numerator and denominator) who enroll in an institution of higher education (IHE) (as defined in section 101(a) of the Higher Education Act of 1965, as amended (HEA) within 16 months of receiving a regular high school diploma.

Contact Person/Division:	**Expected date of implementation:**
Keric Ashley, Data Management Division(DMD)	May 2011

Plan (D)

Brief Description of Plan: California can currently provide a proxy for this data. In this case, proxy data means we can currently produce data that is very close to the requirement, but the data we currently have is not tied to the 16 month time frame. Therefore, we will meet with our postsecondary partners to produce data that meets the exact requirements by September 2011. In the meantime, we will work with our postsecondary partners to develop a process to link longitudinal data to provide the number and percentage of high school graduates who enroll in higher education within 16 months. The CDE will take the lead to convene the technical leads for the California Postsecondary Education Commission (CPEC), the Chancellor's Office for the California Community Colleges (CCC), California State University (CSU), and the University of California (UC) to develop and implement the plan to produce the required data by September 2011.

Expected Report (Title)	Source to Publish Data	Frequency of Updates/Reports
College Going Rate	CDE Web Portal/DMD and/or CPEC (progress will be posted as well).	Annually beginning May 2011

Development

Milestone	Date	Potential Obstacles
1. Post proxy data based on current data.	May 2010	Cost/Funding: Until we meet with our postsecondary partners, we do not know what cost/funding obstacles exist. We do not anticipate anything that will keep us from meeting the requirement, but we have three separate entities (CCC, CSU, and UC) to collaborate with to produce these rates.
2. Develop process to match data between K-12 and postsecondary institutes.	October 2010	
3. Implement process to match data.	May 2011	
4. Post data using new process.	September 2011	

California's SFSF Phase II Application CFDA Number: 84.394

Section V – Indicators (c)(11) and (c)(12)

Indicator: (c)(11)

Implementation			
	Agency/Division	**Estimated Cost (C)**	**Funding Source (Federal, State, or Local)**
Development (A)	DMD	$133,000	Federal/State
Execution (A)			
Oversight (A)			
Technical Assistance (B)			

California's SFSF Phase II Application CFDA Number: 84.394

Section V – Indicators (c)(11) and (c)(12)

Indicator (c)(12)	**Provide, for the State, for each LEA in the State, for each high school in the State and, at each of these levels, by student subgroup (consistent with section 1111(b)(2)(C)(v)(II) of the ESEA), of the students who graduate from high school consistent with 34 CFR 200.19(b)(1)(i) who enroll in a public IHE (as defined in section 101(a) of the HEA) in the State within 16 months of receiving a regular high school diploma, the number and percentage (including numerator and denominator) who complete at least one year's worth of college credit (applicable to a degree) within two years of enrollment in the IHE.**

Please respond (check one): Does the State collect these data (as defined in Indicator (c)(12))?

[1] ☐ Yes, the State collects these data.

If Yes, please respond (check one):

[2] ☐ The State makes the data *publicly available* and updates the data *at least annually* on a website.

➔ Provide the State website where the data are collected and publicly available:[3] Click here to enter text.

[4] ☐ The State makes the data *publicly available* on a website and updates the data *less than annually.*

➔ Provide the State's plan for making the data publicly available and updating it annually on a website in Part 3B. Mark the Public Reporting column next to "Indicator (c)(12)" in the Plan Element Verification Chart in Part 3B, Section I.

➔ Provide the State website where the data are collected and publicly available:[5] Click here to enter text.

[6] ☐ The State does not make the data publicly available on a website.

➔ Provide the State's plan for making the data publicly available and updating it annually on a website in Part 3B. Mark the Public Reporting column next to "Indicator (c)(12)" in the Plan Element Verification Chart in Part 3B, Section I.

California's SFSF Phase II Application CFDA Number: 84.394

Section V – Indicators (c)(11) and (c)(12)

Indicator (c)(12)	Provide, for the State, for each LEA in the State, for each high school in the State and, at each of these levels, by student subgroup (consistent with section 1111(b)(2)(C)(v)(II) of the ESEA), of the students who graduate from high school consistent with 34 CFR 200.19(b)(1)(i) who enroll in a public IHE (as defined in section 101(a) of the HEA) in the State within 16 months of receiving a regular high school diploma, the number and percentage (including numerator and denominator) who complete at least one year's worth of college credit (applicable to a degree) within two years of enrollment in the IHE.

[7] ☒ No, the State does not collect these data.

If No, please respond (check one):

☒ The State will develop and implement the means to collect and publicly report the data (i.e., the State will collect and publicly report the data) by September 30, 2011.

➔ Provide the State's plan for collecting, making the data publicly available, and updating it annually on a website in Part 3B, Section I. Mark both the Collection and Public Reporting columns next to "Indicator (c)(12)" in the Plan Element Verification Chart in Part 3B, Section I.

☐ The State will develop but not implement the means to collect and publicly report the data (i.e., the State will not collect and publicly report the data) by September 30, 2011.

➔ Provide the State's plan for developing the means to collect and to publicly report the data (but not the State's implementation of those means) in Part 3B, Section V.

California's SFSF Phase II Application CFDA Number: 84.394

Section V – Indicators (c)(11) and (c)(12)

Part 3B: SFSF Data Collection and Public Reporting Plan

Process and timeline for developing and implementing indicators by September 30, 2011

Indicator: (c)(12)

Provide, for the state, for each local educational agency in the state, for each high school in the state and, at each of these levels, by student subgroup (consistent with section 1111(b)(2)(C)(v)(II) of the ESEA), of the students who graduate from high school consistent with 34 CFR 200.19(b)(1)(i) who enroll in a public institution of higher education (IHE) (as defined in section 101(a) of the Higher Education Act of 1965) in the state within 16 months of receiving a regular high school diploma, the number and percentage (including numerator and denominator) who complete at least one year's worth of college credit (applicable to a degree) within two years of enrollment in the IHE.

Contact Person/Division:	**Expected date of implementation:**
Keric Ashley, Data Management Division (DMD)	May 2011

Plan (D)

Brief Description of Plan: California can currently provide a proxy for this data. In this case, proxy data means we can currently produce data that is very close to the requirement, but the data we currently have is not tied to the 16 month time frame. In the meantime, we will meet with our postsecondary partners to develop a process to link longitudinal data to provide the number and percentage of high school graduates who earn higher education credit within 16 months. The CDE will take the lead to convene the technical leads for the California Postsecondary Education Commission (CPEC), the California Community Colleges Chancellor's Office, California State University, and the University of California to develop and implement the plan to produce the required data by September 2011.

Expected Report (Title)	Source to Publish Data	Frequency of Updates/Reports
College Credit Earning Rate	CDE Web Portal/DMD and/or CPEC (progress will be posted as well).	Annually beginning May 2011

Development

Milestone	Date	Potential Obstacles
1. Post proxy data based on current data.	May 2010	Cost/Funding: Until we meet with our postsecondary partners, we do not know what cost/funding obstacles exist. We do not anticipate anything that will keep us from meeting the requirement, but we have three separate entities (CCC, CSU, and UC) to collaborate with to produce these rates.
2. Develop process to match data between K-12 and postsecondary institutes.	October 2010	
3. Implement process to match data.	May 2011	
4. Post data using new process.	Sep 2011	

California's SFSF Phase II Application CFDA Number: 84.394

Section V – Indicators (c)(11) and (c)(12)

Indicator: (c)(12)

Implementation			
	Agency/Division	**Estimated Cost (C)**	**Funding Source (Federal, State, or Local)**
Development (A)	DMD	$133,000	Federal/State
Execution (A)			
Oversight (A)			
Technical Assistance (B)			

California's Application for Funding for Phase II of the Education Fund under the State Fiscal Stabilization Fund Program
CFDA Number: 84.394

PART 3C GENERAL REQUIREMENTS

(1) Describe the processes the California Department of Education employs to review and verify the required data and other information on the indicators and descriptors.

The California Department of Education (CDE) collects, analyzes, and publishes fiscal, demographic, and student performance data from schools, districts and county offices of education. The CDE publishes the data on the CDE Web site throughout the year.

1. Data Submission

California currently collects statewide data through various means. Data are collected both directly by the CDE and by its contractors. Data collection tools help ensure accuracy and completeness of the data by identifying errors and providing warnings for data submitted electronically. For instance, schools, districts, and county offices of education submit data to the statewide data collection systems by batch-loading data, key-entering data, submitting CDs, or via hardcopy. Additional data are collected through the assessment process via electronic data submissions and on test documents.

The main source systems for collecting the data used to generate these indicators are:

Assessments

- California English Language Development Test (CELDT): A required state test for English language proficiency that must be given to students whose primary language is other than English.

- California High School Exit Examination (CAHSEE): Assistance for students and schools with the administration of the California High School Exit Examination (CAHSEE). Beginning with the Class of 2006, all public school students will be required to pass the CAHSEE to earn a high school diploma.

- Standardized Testing and Reporting (STAR): Administration of the Standardized Testing and Reporting (STAR) program. Test results are used for student and school accountability purposes.

California Longitudinal Pupil Achievement Data System (CALPADS)
A system that allows for tracking a student's academic performance over time. The online source at the CDE for these data is http://www.cde.ca.gov/ds/sp/cl/.

Consolidated Application (ConApp) Data System
A system used to gather data that is used to distribute categorical funds from various state and federal programs to county offices, school districts, and direct-funded charter schools throughout California; determine Title I status (schoolwide or targeted); etc.

Standardized Account Code Structure (SACS) Data System
Districts and county offices of education report their financial information in a standard format called the *Standardized Account Code Structure,* or SACS. The instructions for

SACS are in the California School Accounting Manual. The online source at the CDE for these data is http://www.cde.ca.gov/fg/ac/ac/.

2. Verifying and Analyzing the Data

Data received by the department are verified by staff to certify that they meet established specifications for data files. File layouts, data types, and various codes are checked. A number of internal checks are also employed to check data accuracy and completeness.

Data are then analyzed and compared with previous collections to look for serious deficiencies in the data. Depending on the type of data, further analyses are conducted. Assessment data from contractors are carefully analyzed to certify the accuracy of the data. This includes checks to assure that all data are within the appropriate ranges and that any calculated values (sub-scores, proficiency levels, raw score to scale score conversions) are correct.

Overall, the data collection systems are designed to prevent errors at the time of submission. However there are instances when data need to be corrected or added to a given collection. In the case of assessment data, schools and districts can review demographic data and other information and use electronic means to update the data as necessary.

The CDE employs a variety of means to verify and analyze the data. These means include:

1) During data collection, imposing numerous data edit checks to ensure the data:
    a. Prevent erroneous data from being submitted;
    b. conform to business rules (e.g., a student cannot be enrolled in a K-12 grade level and be older than 22 years of age);
    c. are among appropriate option responses (e.g., gender can only be male or female); and
    d. are within the appropriate range (e.g., enrollment date for this school year must fall within this school year).

2) After data collection, running batch-edit checks to:
    a. Check variance;
    b. compare data to prior year amounts to see if there have been significant changes;
    c. compare data with data in other sets (e.g., comparing the numbers of English learners in the Language Census to the number of English learners tested); and
    d. conducting on-site verification checks.

3) After aggregating data:
    a. Checking aggregate amounts for reasonableness; and
    b. comparing data to prior year to see if there are significant changes.

Schools, districts and county offices of education submit different types of data to the CDE throughout the year. The CDE makes every effort to catch errors or misinterpretations of the data. However, the CDE does not change information after it has been certified and released by the CDE.

If errors are discovered in data submitted by contractors, contractors correct the data and submit new files.

3. Dissemination of Information and Data

Once the data are collected, verified, and analyzed, the data and information are publicly disseminated from the following Web sites:

- **Academic Performance Index - API (school, district, state):** California Department of Education's Policy and Evaluation Division distribute API data. The online source at CDE for these data is http://www.cde.ca.gov/ta/ac/ap and parent guide is available at: http://www.cde.ca.gov/ta/ac/ap/documents/parentguide09.pdf
  Generally, CDE releases Academic Performance Index (API) "Base" data in May and releases Academic Performance Index (API) "Growth" data in late August or early September as part of the Accountability Progress Reporting (APR).

- **Accountability Progress Reporting - APR:** The CDE combines Growth API, AYP, and PI data into the Accountability Progress Reporting (APR). The APR are generally released in late August or early September. CDE's online source for these data is http://www.cde.ca.gov/ta/ac/ar and parent translations are available at: http://inet2.cde.ca.gov/cmd/translatedparentaldoc.aspx?docid=5674,5675,5676,5677,5678,5679,5680

- **Adequate Yearly Progress - AYP:** This federally required report is based on test scores for schools, districts, counties, and the state. The online source at CDE for these data is http://www.cde.ca.gov/ta/ac/ay.

- **Fiscal Information:** Financial data for school districts and county offices of education may be found online at http://www.cde.ca.gov/ds/fd/fd.

- **California Department of Education DataQuest:** Provides a variety of information including student demographics, course offerings, student enrollment counts, and test results. Generally, the CDE publishes demographic data (such as enrollment, grads, and drops) in the spring and Language Census in the summer. The online source at CDE for these data is http://dq.cde.ca.gov/dataquest/.

- **Ed-Data:** State, county, district, and school level reports covering topics such as students, staffing, finances, and performance rankings, with an emphasis of school finance. http://www.ed-data.k12.ca.us/welcome.asp Year-end unaudited financial data are collected by CDE's Financial Accountability and Information Services Unit and are generally available by March.

Program Improvement - PI : Schools that receive federal Title I funds go into the intervention program if they do not make AYP for two years in a row on the same indicator. The list of PI schools is part of the APR released in late August or early September. The online source at CDE for these data is http://www.cde.ca.gov/ta/ac/ti/programimprov.asp.

(2) Describe the processes the State employs to ensure that, consistent with 34 CFR 99.31(b), the required data and other information are not made publicly available in a manner that personally identifies students, where applicable.

1. Privacy of Student Records Collected and Maintained by the CDE

The following information pertains to the privacy of student records collected and maintained by the CDE.

Statutory Authority

To meet its statutory responsibilities, the CDE collects and maintains personally identifiable information from the education records of California students, such as: Students' names, identification numbers, addresses, races/ethnicities, gender, dates of birth, places of birth, names and addresses of parents or guardians; attendance data; data related to students' progress; standardized test scores; disciplinary actions; data related to eligibility in programs and special education services.

Personally Identifiable Information from Education Records

The CDE collects and maintains personally identifiable student information from education records. With some exceptions, such personally identifiable information is considered confidential and cannot be disclosed without the parent's or student's (if the student is eighteen or older) written consent.

Exceptions to Written Parental Consent Requirement

Records may be disclosed by the school or the district to the CDE, as the State educational authority, without prior written consent if the disclosure is in connection with:

- An audit or evaluation of federal or state-supported education programs.
- The enforcement of or compliance with federal legal requirements relating to such programs.

2. CALPADS Security and Privacy

California adheres to the confidentiality requirements in the Family Educational Rights and Privacy Act of 1974 (FERPA), as amended (FERPA, 34 Code of Federal Regulations, Part 99), and to California state laws and regulations regarding educational records, privacy, and confidentiality.

CALPADS collects and maintains educational records that contain personally identifiable information on students. The personally identifiable information from educational records collected and maintained by CALPADS is classified as confidential and may also be sensitive. CALPADS data, therefore, must be protected from inappropriate access, use, and disclosure.

CALPADS security controls are implemented to protect the information processed and stored within the system. Specifically, these controls settings are designed to:

- Protect the privacy and confidentiality of the system information.
- Ensure that only authorized users access the system.
- Ensure that users are uniquely identified when using the system.
- Associate and connect certain actions performed—within the system—to specific users.
- Ensure that users have access to perform only the actions they have been authorized to carryout.

CALPADS Compliance with FERPA Requirements

In compliance with FERPA requirements, the CALPADS solution applies security on each tier of the system's architecture to support the following FERPA requirements:

- Classify a record as confidential and/or private to support compliance with state and federal laws regarding student privacy.
- Automatically suppress data that does not follow privacy laws when generating reports and extracts.
- Automatically suppress the display of personally identifiable information unless the user is authorized by the respective school district to have access to such information.
- Enforce privacy rules by suppressing demographic and assessment results data for non-authorized users using business rules defined by the CDE.
- Automatically notify LEAs when a researcher has made a request to the CDE for non-aggregate data specific to the given LEA (met through the FERPA reporting database application).
- Automatically restrict the ability for non-authorized users to view student-level data that may be deemed an infringement of the privacy policy.
- Maintain data requests in a Tracking System.

FERPA As It Relates to CALPADS Users

FERPA allows disclosure of personally identifiable information from educational records without consent to school officials, including teachers, within educational agencies or institutions, if the given agencies or institutions have determined that the school officials have legitimate educational interests in the information. Therefore, it is incumbent upon LEA Administrators to consider the legitimate educational interest or "need to know" basis of any district or school employee who is granted access to information in the CALPADS system. The FERPA regulations are clear that it is not enough that an individual who has been granted access to personally identifiable information from educational records is a school official: The school official must have a legitimate educational interest in the information. For example, a school staff member, by virtue of his or her job-related duties, may have access to all records in a school information system, including records of those personally known to that staff

member, such as neighbors or friends. The staff member should not access those records unless specifically assigned a job-related duty in support of the processing or handling of such records.

Parental Rights under FERPA to Inspect, Review, and Request Amendment of Education Records

FERPA gives parents certain rights regarding their children's education records. These rights transfer to the student when he or she reaches the age of eighteen or attends a school beyond the high school level. Students to whom the rights have transferred are considered "eligible students."

The Role of CALPADS Users in Ensuring Security

CALPADS users are an integral part in ensuring that the CALPADS security controls provide the intended level of protection.

All local educational agency (LEA) representatives who are authorized to access CALPADS will see the following banner language upon each login to the system:

> "NOTICE: You are about to access the CALPADS computer system of the State of California Department of Education ("the Department"). This system is intended for authorized users only, in accordance with the CALPADS Rules of Behavior Agreement and applicable state and federal laws. Unauthorized access to or use of this system, or of any information in the system, is strictly prohibited by Department policy, the CALPADS Rules of Behavior Agreement, and applicable state and federal laws. Unauthorized access to this system and/or unauthorized use of information from this system may result in civil and/or criminal penalties under applicable state and federal laws.
>
> By using this system, you are acknowledging and agreeing that all information concerning your access to this system, including but not limited to any information entered, stored or retrieved by you, may be monitored, retrieved, and/or disclosed by authorized personnel, including authorized network administrators and CDE personnel, for any lawful purpose, including but not limited to criminal prosecution."

CALPADS users are required to protect CALPADS information in any form. This includes information contained on printed reports, data downloaded onto computers and computer media (e.g., diskettes, tapes, compact disks, thumb drives, etc.), user computer monitors, or any other format.

CALPADS Software Security

The CALPADS software security model is based on Microsoft Active Directory (AD) and the CALPADS security data model:

- **User Authentication.** The CALPADS system will validate authenticity of users through Active Directory (AD). Authentication of users' credentials is based on user-IDs/passwords.
- **User Authorization.** CALPADS security is designed to allow users access only to the sensitive information for which they have educational needs. School-level users will only be able to review student information for students enrolled in their given schools. District-level users will only be able to see data for students enrolled in their given districts.
- **Session Management.** The CALPADS solution for session management implements session "timeouts" that log users out of the CALPADS application when the users' accounts have been idle for specified lengths of time. In addition, the system restricts individual users to one or more active sessions or instances at a time, configurable by role.
- **Data Security.** All permanent data in CALPADS are stored at the database tier. These data are not available directly to any user. All data access is managed from the Web tier through the application tier.
- **Data Security on Aggregate Data Sets.** Any CALPADS aggregate data that are available to designated parties/users will apply the CDE's "Rule of Ten." This means that any aggregate numbers that are derived from 10 or less than 10 students will not be displayed. In addition, subsequent subtotals and grand totals that include withheld aggregate numbers can also be withheld.
- **Network Encryption.** All data, including User IDs and passwords, are transmitted between the users' Web browsers and the CALPADS application's Web server using 128-bit encryption, Secure Lockets Layer (SSL) protocol. This method negotiates and employs the essential functions of mutual authentication, data encryption, and data integrity for secure transactions. The SSL security is activated when the login page is displayed, encrypting the transferred information that is input by the users.
- **Firewall Security.** There are four firewalls implemented in the CALPADS production environment. There is a firewall in front of the Web Tier and in between each of the subsequent tiers. The firewall security is implemented by defining specified ports from which Web users can access the Web servers, and access to other ports are blocked at the firewall. In addition, only specific ports are open between each tier so that only specific servers can communicate with each other on specific ports.

3. Assessment Records

The State security procedures regarding student and test security policies are outlined in the California *Education Code* (EC) 60607 (c) (1) , and the *California Code of Regulations (CCR)* which includes *CCR* (CAHSEE) 1207.5 and *CCR* (STAR) Section 859.

Security procedures and policies are clearly stated throughout all the testing program contracts. All transfer of data is encrypted and all sensitive data is removed. Testing program security is monitored closely by the CDE for each testing program contract. Any California student assessment data provided by the CDE in response to a request is managed in accordance with

all applicable federal and California privacy laws including, but not limited to: Family Educational Rights and Privacy Act of 1984 (FERPA) (20 U.S.C. Sec. 1232g); the Children's Online Privacy Protection Act (COPPA) (*CCR* Sections 49069 to 49079); the California Public Records Act (*California Government Code* sections 6250 to 6276.48); and the California Information Practices Act (*California Civil Code* Section 1798). All requests for data must be completed and submitted to CDE.

No test scores provided by the CDE are reported electronically, in hard copy, or in other media, to any audience, if the aggregate or group is composed of ten (10) or fewer individual pupil scores. In addition, no test scores provided by the CDE are reported electronically, in hard copy, or in other media, to any audience, if student scores are in any way identifiable to specific students.

The California Department of Education (CDE) is committed to ensuring the security of student-level data. The CDE has a number of security measures in place to ensure security and privacy of these data. The following information details security and privacy measures relevant to the CDE and to the California Longitudinal Pupil Achievement Data System (CALPADS).

Acronyms

Common acronyms and initialisms used in California's SFSF Phase II Application

A

Acronym	Description
AAAD	Academic Accountability and Awards Division
ACA	America COMPETES Act
ACT	American College Testing (Outside Source)
AP	Advanced Placement
APDB	Academic Planning Database System

B

Acronym	Description
BCP	Budget Change Proposal

C

Acronym	Description
CASE	Credentialing Automation System Enterprise
CAHSEE	California High School Exit Examination
CALPADS	California Longitudinal Pupil Achievement Data System
Cal-PASS	California Partnership for Achieving Student Success
CALTIDES	California Longitudinal Teacher Integrated Data Education System
CCC	California Community Colleges (Outside Source)
CCCCO	California Community Colleges Chancellor's Office
CCEDS	California Comprehensive Education Data System
CCSESA	California County Superintendents Educational Services Association (Outside Source)
CDE	California Department of Education
CFR	Code of Federal Regulations
CMA	California Modified Assessment
CMIS	Compliance, Monitoring, Intervention, and Sanctions program
COMIS	Chancellor's Office Management Information System
ConApp	Consolidated Application
COSMOS	California Summer School for Math and Science
CPEC	California Postsecondary Education Commission (Outside Source)
CPHS	Committee for the Protection of Human Subjects
CSD	Charter Schools Division
CSI	California School Information Services
CSS	Corporate Student System
CST	California Standards Tests
CSU	California State University
CTC	Commission on Teacher Credentialing (Outside Source)

D

Acronym	Description
DED	Deliverable Expectation Documents
DMD	Data Management Division
DSID	District and School Improvement Division
DTS	Department of Technological Services
DQC	Data Quality Campaign

E

Acronym	Description
EAP	Early Assessment Program
EC	Education Code
EDD	Employment Development Department
ELCSD	English Learner and Curriculum Support Division
EPC	Education Program Consultant
ERS	Enrollment Reporting System
ES	Enterprise System
ESEA	Elementary and Secondary Education Act of 1965

F

Acronym	Description
FCMAT	Fiscal Crisis and Management Assistance Team
FPD	Fiscal Policy Division

G

Acronym	Description

H

Acronym	Description
HQT	Highly Qualified Teacher

I

Acronym	Description
IES	Institute of Education Sciences
IHE	Institutions of Higher Education

J

Acronym	Description
JPA	Joint Powers Authority

L

Acronym	Description
LEA	Local Educational Agency

M

Acronym	Description
MESA	Mathematics, Engineering, Science Achievement

N

Acronym	Description
NAEP	National Assessment of Educational Progress
NCLB	No Child Left Behind Act of 2001
NGA	National Governors Association (Outside Source)

O

Acronym	Description
OCIO	Office of the State Chief Information Officer
OSE	Office of the Secretary of Education (Outside Source)

P

Acronym	Description
PIMS	Personnel Information Management System

Q

Acronym	Description

R

Acronym	Description

S

Acronym	Description
SAT	Scholastic Achievement Test
SBE	State Board of Education
SLDS	Statewide Longitudinal Data Systems
SSID	Statewide Student Identifier
SSPI	State Superintendent of Public Instruction
SSR	School Staffing Report
STEM	Science, Technology, Engineering And Mathematics

T

Acronym	Description
TEP	Teacher Equity Plan
TES	Transcript Evaluation Services
TSD	Technology Services Division

U

Acronym	Description
UC	University of California (Outside Source)

V

Acronym	Description

W

Acronym	Description

X, Y, Z

Acronym	Description

Local Educational Agency Teacher and Leader Evaluation Survey

State Fiscal Stabilization Fund Data Collection and Reporting Plan

Demographic Information: LEA Name (Self-populated)	CD Code: (Self-populated)
Number of Teachers (Self-populated)	Number of Principals (Self-populated)
Part One	
1.1 Descriptor: (a)(1) Which best describes the system your LEA uses to evaluate *teachers?* Select all that apply. *[Drop down menu]* Local Board-approved evaluation system Bargained evaluation system Evaluation system based on the California Standards for the Teaching Profession Other evaluation system (describe)	
1.2 Descriptor: (a)(2) Which best describes the system your LEA uses to evaluate *principals?* Select all that apply. *[Drop down menu]* Local Board-approved evaluation system Evaluation system based on the California Professional Standards for Educational Leaders Other (describe)	

Part Two		Not used for this purpose	Used as partial evidence	Used as primary basis for decisions
2.1 Descriptor: (a)(1) How are the results of the *teacher* evaluation system identified in question 1.1 used to evaluate:				
	a) decisions regarding teacher development			
	b) decisions regarding teacher compensation			
	c) decisions regarding teacher promotion			
	d) decisions regarding teacher retention			
	e) decisions regarding teacher removal			
2.2 Descriptor: (a)(2) How are the results of the *principal* evaluation systems identified in question 1.2 used to evaluate:				
	a) decisions regarding principal development			
	b) decisions regarding principal compensation			
	c) decisions regarding principal promotion			
	d) decisions regarding principal retention			
	e) decisions regarding principal removal			
2.3 *Indicator: (a)(3)* How are student achievement outcomes or student growth data used to evaluate the performance of *teachers* as an evaluation criterion?				
2.4 Indicator: (a)(6) How are student achievement outcomes or student growth data used to evaluate the performance of *principals* as an evaluation criterion?				

Part Three		
3.1 *Indicator: (a)(4)* Does your LEA use an evaluation system for *teachers* with: *[Drop down menu]* Two ranking categories (e.g. satisfactory/unsatisfactory) Three ranking categories (e.g. outstanding/satisfactory/unsatisfactory) Four ranking categories (e.g. excellent/satisfactory/needs improvement/unsatisfactory) Other (describe)* * This will require consultation with TSD to determine how to proceed on question 3.2 if "other is marked"		
3.2 *Indicator: (a)(4)* (Site level collection) Please enter the name of each category and the number of teachers ranked in each. *The appropriate number of boxes will appear for question 3.2 to match the selection made in question 3.1.*	**Category One**	**Category Two**
	Number of teachers rated in this category	Number of teachers rated in this category
3.3 *Indicator: (a)(5)* Is the information above publicly reported?		
3.3 Indicator: (a)(7) Does your LEA use an evaluation system for *principals* with: *[Drop down menu]* Two ranking categories (e.g. satisfactory/unsatisfactory) Three ranking categories (e.g. outstanding/satisfactory/unsatisfactory) Four ranking categories (e.g. excellent/satisfactory/needs improvement/unsatisfactory) Other (describe)		
3.5 *Indicator: (a)(7)* (District level collection) Please enter the name of each category and the number of principals ranked in each. *The appropriate number of boxes will appear for question 3.5 to match the selection made in question 3.4.*	**Category One**	**Category Two**
	Number of principals rated in this category	Number of principals rated in this category

California's Definition of Persistently-Lowest Achieving Schools

The identification of persistently lowest-achieving schools in California is a multi-step process that is informed by both federal and state law. The steps in identifying schools as persistently lowest-achieving are summarized below.

Step 1: Identifying the Pool of Schools

Per the School Improvement Grant (SIG) guidance developed by the U.S. Department of Education (ED), schools in improvement, corrective action, or restructuring must be identified for the pool and be classified as Tier I schools. In California, these are schools that were identified for Program Improvement (PI) during the 2009-10 school year. Also required to be part of the pool are secondary schools that are eligible for federal Title I funds, but do not receive those funds. Per the Federal guidance, these secondary schools must be part of a local educational agency (LEA) which receives Title I funds. These schools are classified as Tier II schools per the SIG program.

Step 2: Identifying Five Percent of the Pool

To ensure that no one type of school is over-represented in the final list of persistently lowest-achieving schools and to facilitate systemic reform across the K-12 segment, the pool of schools is divided into five separate groups. The table below shows the groupings. Five percent of each group is identified as persistently lowest-achieving.

Group
Elementary schools in PI (Tier I)
Middle schools in PI (Tier I)
High schools in PI (Tier I)
Middle schools, eligible but not receiving Title I funds (Tier II)
High schools, eligible but not receiving Title I funds (Tier II)

Step 3: Evaluating Academic Performance and Progress

To identify which schools are the lowest achieving in each of the five groups, a three-year average proficiency rate for English-language arts (ELA) and mathematics is computed for all schools.

The number of students who scored proficient in ELA and mathematics as shown on the Adequate Yearly Progress (AYP) reports in the "All Students" group is summed across 2007, 2008, and 2009. That number is then divided by the number of valid scores from the AYP reports in the "All Students" group over the same time period to produce a three-year average proficiency rate. All schools are then sorted on the three-year average proficiency rate from high to low.

Schools are also evaluated on their academic progress on the state's Academic Performance Index or API. Schools that gain a net of 50 points or more on the API growth score over the last five years or meet the statewide goal of 800 during the 2009-10 school year are deemed to have shown significant academic progress and do not continue in the analysis.

Step 4: Applying Exclusions

Before selecting the five percent of schools in each of the five groups as specified in Step 2 above, school size is evaluated. Consistent with the n-size rules for the state's API system and for AYP determinations, schools with fewer than 100 valid test scores in each of the three years evaluated (2007, 2008, and 2009) are excluded. Valid scores refer to the number of students continuously enrolled for a full academic year as defined in California's Consolidated State Application Accountability Workbook.(Note: California will be applying for a waiver to include a "minimum n" as part of the criteria for identifying persistently lowest-achieving schools.)

No other exclusions are made.

Step 5: Identifying Schools Based on Academic Performance

Using the five groups of schools identified in Step 2, individual schools are identified as lowest performing until the five percent figure is reached. For example, within the "Elementary Schools in PI" group, the school with the lowest three-year average proficiency rate is identified first, followed by the school with the second lowest three-year average proficiency rate and so on until the figure representing 5 percent is reached.

Step 6: Identifying Schools Based on Graduation Rates

Federal guidance requires that in addition to the five percent of schools identified as persistently lowest-achieving, schools in Tiers I and II be identified if the school's graduation rate is below 60 percent over a number of years.

For this identification process, California employed the National Center for Educational Statistics (NCES) four-year completer rate for which we are approved to use until four years of longitudinal data are available through the California Longitudinal Pupil Achievement Data System (CALPADS). More information about the NCES four-year completer rate can be found in the 2009 Adequate Yearly Progress Information Guide located on the CDE's AYP Web page at www.cde.ca.gov/ta/ac/ay.

The NCES four-year completer rate was evaluated for schools in Tier I and Tier II. Any school with a high school graduation rate below 60 percent in each of the last four years was included in the list. (Note: To be consistent with the n-size approved in California's Accountability Workbook, only schools with 100 or more valid scores in each of the last four years were included in the analysis.)

Step 7: Completing the List of Persistently Lowest-Achieving Schools

The final step in the process is to add Tier I schools identified in Step 6 to the Tier I schools identified by academic performance, and then add Tier II schools identified in Step 6 to Tier II schools identified by academic performance. Finally, Tier III schools (all other schools included in the pool but not identified as part of the lowest-achieving schools list) are identified. A list of schools in order by county name, district name and school name will be posted on the CDE Web page. Tier I, II, or III will also be noted for each school.

Step 6: Identifying Schools Based on Graduation Rates

Federal guidance requires that in addition to the five percent of schools identified as persistently lowest-achieving because of academic performance, schools in Tiers I and II be identified if the school's high school graduation rate is below 60 percent over a number of years.

California is currently approved to use the National Center for Educational Statistics (NCES) four-year completer rate as the high school graduation rate until four years of longitudinal data are available through the California Longitudinal Pupil Achievement Data System (CALPADS). More information about the NCES four-year completer rate can be found in the 2009 Adequate Yearly Progress Information Guide located on the CDE's AYP Web page at www.cde.ca.gov/ta/ac/ay.

The NCES four-year completer rate was evaluated for schools in Tier I and Tier II. Any school with a high school graduation rate below 60 percent in each of the last four years was included in the list. (Note: To be consistent with the n-size approved in California's Accountability Workbook, only schools with 100 or more valid scores in each of the last four years were included in the analysis.)

Step 7: Completing the List of Persistently Lowest-Achieving Schools

The final step in the process involves adding 4 Tier I schools identified in Step 6 due to graduation rate to the 136 Tier I schools identified because of academic performance. In addition, 4 Tier II schools identified in Step 6 will be added to the 51 Tier II schools identified by academic performance. And finally, Tier III schools (all other Title I schools in PI but not identified as part of the lowest-achieving schools list) will be identified. A list of schools in order by county name, district name and school name will be posted on the CDE Web page. Tier I, II, or III will also be noted for each school.